MEETING NOTICE FOR THE CITY OF HUBBARD

TUESDAY **JULY 21, 2020**

.....

PLANNING COMMISSION: FILIPPO, HOLUM, STIERLE, COUNTRYMAN, KULIKOV

.....

This meeting will be held virtually. This is to enable interested citizens to listen to the meeting. Except for the public hearing portion of the meeting, all public comment is suspended during this meeting due to platform restrictions.

Should you wish to speak during the public hearing portion of the meeting, you may sign up by completing the form on the City's webpage at: https://www.cityofhubbard.org/bc/webform/sign-if-you-want-speak-meeting, or calling City Hall 48 hours prior to the meeting. Written comments may be provided in advance of the meeting by sending an email to vlnogle@cityofhubbard.org or mailing your written comments to the address provided below. If you desire to participate in the public hearing and are unable to provide written comments in of the meeting, and at least 48 hours in advance of the public hearing, please contact the Director of Administration/City Recorder, Hubbard City Hall, 3720 2nd St., Hubbard OR 97032 (Phone No. 503-981-9633) prior to the scheduled meeting time.

Join Zoom Meeting
https://us02web.zoom.us/j/84946298568?pwd=Q2xBM0FPdVdFRC9rWWdMRFprUStmUT09

Meeting ID: 849 4629 8568
Password: 103631

One tap mobile
+12532158782,,84946298568#,,,,0#,,103631# US (Tacoma)
+13462487799,,84946298568#,,,,0#,,103631# US (Houston)

Dial by your location
+1 253 215 8782 US (Tacoma)
+1 346 248 7799 US (Houston)
+1 408 638 0968 US (San Jose)
+1 669 900 6833 US (San Jose)
+1 301 715 8592 US (Germantown)
+1 312 626 6799 US (Chicago)
+1 646 876 9923 US (New York)

Find your local number: https://us02web.zoom.us/u/kbeXqLm8X7

*******ACCESSABILITY NOTICE********

Please contact the Director of Administration/City Recorder, Hubbard City Hall, 3720 2nd St., Hubbard OR 97032 (Phone No. 503-981-9633) prior to the scheduled meeting time if you need assistance accessing this electronic meeting. TCC users please call Oregon Telecommunications Relay Service at 1-800-735-2900.

Agendas are posted at the Hubbard Post Office, City Hall, and the City website at www.cityofhubbard.org. You may schedule Agenda items by contacting the Director of Administration/City Recorder Vickie Nogle at 503-981-9633. (TTY / Voice 1-800-735-2900)

SEE ATTACHED AGENDA

Posted 7/16/2020, 4:00 p.m.
Vickie L. Nogle, MMC
Director of Administration/City Recorder

HUBBARD PLANNING COMMISSION MEETING AGENDA
HUBBARD CITY HALL
3720 2ND STREET (503) 981-9633

JULY 21, 2020 - 6:30 PM
LOCATION: (VIRTUAL - Refer to Cover Sheet for details)

MEETING Notice: This meeting will be held via conference call. This is to enable interested citizens to listen to the meeting. Except for the public hearing portion of the meeting, all public comment is suspended during this meeting due to platform restrictions. Should you wish to speak during the public hearing portion of the meeting, you may sign up by completing the form on the City's webpage at: https://www.cityofhubbard.org/bc/webform/sign-if-you-want-speak-meeting, or calling City Hall 48 hours prior to the meeting. Written comments may be provided in advance of the meeting by sending an email to vlnogle@cityofhubbard.org or mailing your written comments to the address provided below. If you desire to participate in the public hearing and are unable to provide written comments in of the meeting, and at least 48 hours in advance of the public hearing, please contact the Director of Administration/City Recorder, Hubbard City Hall, 3720 2nd St., Hubbard OR 97032 (Phone No. 503-981-9633) prior to the scheduled meeting time.

1) **CALL TO ORDER.**
   a) **Flag Salute.**
   b) **Roll Call.**

2) **APPROVAL OF THE JUNE 16, 2020, PLANNING COMMISSION MEETING MINUTES.**

3) **PUBLIC HEARING.**
   a) **Site Development Review (DR #2020-02) to construct a second 13,000 SF general manufacturing building - Mike Holleman (2690 Industrial Avenue).**

4) **ADJOURNMENT.** **(Next regular scheduled Planning Commission meeting August 18, 2020, at 6:30 p.m.)**

*******ACCESSABILITY NOTICE********

Please contact the Director of Administration/City Recorder, Hubbard City Hall, 3720 2nd St., Hubbard OR 97032 (Phone No. 503-981-9633) prior to the scheduled meeting time if you need assistance accessing this electronic meeting. TTY users please call Oregon Telecommunications Relay Service at 1-800-735-2900.

CITY OF HUBBARD
PLANNING COMMISSION MINUTES
JUNE 16, 2020

CALL TO ORDER. The Hubbard Planning Commission meeting was called to order at 6:36 p.m. by the Planning Commission Chairman Anthony San Filippo virtually via ZOOM because of the COVID - 19 virus.

Planning Commission Present: Planning Commission Chairman Anthony San Filippo, Planning Commissioner Glenn Holum, and Planning Commissioner Jessica Countryman. Planning Commissioner Scott Stierle came into meeting at 6:39 p.m.

Unexcused: Planning Commissioner Nik Kulikov.

Staff Present: Director of Administration/City Recorder Vickie Nogle, City Planner Holly Byram, MWVCOG, Public Works Superintendent Michael Krebs, Public Works Administrative Manager Melinda Olinger, Administrative Assistant/Court Clerk Julie Hedden.

Guest: Steve Kay with Cascadia Planning & Design.

FLAG SALUTE.
Planning Commission Chairman Anthony San Filippo led the group in reciting the Pledge of Allegiance.

APPROVAL OF THE MAY 19, 2020, PLANNING COMMISSION MEETING MINUTES. MSA/Planning Commissioner Jessica Countryman / Planning Commissioner Glenn Holum moved to approve the minutes from the May 19, 2020 meeting. Planning Commission Chairman Anthony San Filippo, Planning Commissioner Glenn Holum, and Planning Commissioner Jessica Countryman were in favor. Motion passed unanimously.

PARTITION APPLICATION (#PAR 2020-02 BROADACRES, BRONEC) – 11984 BROADACRES ROAD NE, Tax lot 041W3300100 – Steve Kay, Cascadia Planning & Design. City Planner Holly Byram summarized the Staff report that was provided in the packet. She said in the Hubbard Development Code a Partition is a Type 1, Level 2 action which means that it is not a public hearing, it is a Planning Commission decision based upon the Staff recommendation.

City Planner Holly Byram said the Staff report that is in the packet goes over all the criteria and this is the property that was just approved for annexation and zone change. She stated this is a really big piece of property and what they are doing now is separating the part that is inside the Urban Growth Boundary and City Limits from the part that is outside of the UGB and City Limits so it is only a 2 lot Partition.

City Planner Holly Byram said overall the property is 81.52 acres, the part that is inside the Urban Growth Boundary/City Limits is 51.74 acres and the part that is outside is 24.21 acres, so

they want to remove the piece that is outside the UGB and that stays within Marion County jurisdiction and the intention is to keep it for agriculture use. She stated with this they will be able to come in for Parcel 1 with a development application in the future, so it will be a clean break with the County. H. Byram said these types of applications are sent to Marion County for their comments and they did not have any concerns, as long as that remaining piece stays intact and for agriculture use, which it will be.

City Planner Holly Byram went through the Review Standards for the application. She said on the bottom of Page 5 there is a statement that says "no parcel within an approved partition may be redivided within the same calendar year in which it was recorded, except through the subdivision process." She stated this means if this partition is approved the applicant cannot come back with another Partition application within the next year, but they can come back with a subdivision application and that is probably what you will see in the future.

Planning Commissioner Scott Stierle entered the meeting at 6:39 p.m.

City Planner Holly Byram said in regard to streets, there is no development proposed at this time for this application, the properties have access on Broadacres Road and Front Street and when the property comes in for development in the future, that is when they will propose a Street plan that will show new interior streets that they will be providing. She stated the Applicant is proposing right-of-way dedication on both streets with this application, so you will get the right-of-way that is needed with this development.

City Planner Holly Byram said in terms of improvement requirements, typically a partition would require the developer to install a fire hydrant, street improvements, water hookup, sewer hookup, storm drain, and street lights, but there is no development proposed at this time so it does not make sense for the developer to put in infrastructure if you do not know specifically what the connections will be. She stated one of the Conditions of Approval for the annexation and zone change was to give us full master plans for sewer, water, and street, so those master plans will come with any kind of development application.

City Planner Holly Byram said based on the Hubbard Development Code it is a very straight forward partition, and Staff is recommending the partition be approved. She stated as part of the process, notices were sent to the neighbor property owners and they had an opportunity to comment and there was contact received that asked a question about wetlands, and she reassured him that there would be a time to review those reports and maps at the time of development application.

City Planner Holly Byram said she has included four conditions of approval: No parcel can be re-divided by a partition in the next calendar year, they will have 2 years to submit their partition plat, they need to comply with the Marion County surveyors requirements, and they need to provide a recorded plat to the City after recording. She stated the action she is recommending is to approve this partition plat, adopting the staff report finding and the conditions of approval.

Planning Commissioner Glen Holum said he had no specific questions, but if the applicant wanted to speak, he would be interested in hearing any comments he has. The applicant had no comments.

MSA/Planning Commissioner Glen Holum/Planning Commissioner Jessica Countryman made a motion to approve Partition file # Par 2020-02 as presented, adopting the staff report findings and recommended conditions of approval. Planning Commissioners Scott Stierle, Planning Commissioner Chairman Anthony San Filippo, Planning Commissioner Glenn Holum, and Planning Commissioner Jessica Countryman were in favor. Motion passed unanimously.

ADJOURNMENT. (The next scheduled Planning Commission Meeting will be July 21, 2020 at 6:30 p.m.) MSA/Planning Commissioner Glen Holum /Planning Commissioner Jessica Countryman moved to adjourn the meeting. Planning Commissioner Scott Stierle, Planning Commissioner Glenn Holum, Planning Commissioner Chairman Anthony San Filippo, and Planning Commissioner Jessica Countryman were in favor. Motion passed unanimously. Meeting was adjourned at 6:48 p.m.

_____

Anthony San Filippo
Planning Commission Chairman

ATTEST:

_____

Vickie L. Nogle, MMC
Director of Administration/City Recorder

_____

Julie Hedden
Administrative Assistant/Court Clerk
Recording & Transcribing

Hubbard Planning Commission - Public Hearing Script

July 21, 2020

CHAIR: Good evening, my name is Anthony San Filippo. I am the Chair of the Hubbard Planning Commission, and I will be presiding over this hearing. This is the time and place set for the public hearing in the matter of**:**

Site Development Review, file # DR 2020-02, proposing to develop a second 13,000 square foot industrial building for manufacturing at 2690 Industrial Avenue, submitted by Mike Holleman of MH Custom Cabinets, LLC. The applicant is also requesting a code interpretation from the Planning Commission.

The hearing is now open. It is _____ PM. Oregon land use law requires several items to be read into the record at the beginning of every public hearing. The City Planner will review this material; your patience is appreciated as she goes through these statements.

City Planner (Holly Byram): The applicable substantive criteria upon which this case will be decided are found in the Hubbard Development Code, sections 2.107, 2.200, and 3.105. The specific criteria are summarized in the staff report and will be reviewed at this hearing.

All testimony and evidence received during this public hearing must be directed toward these approval criteria, or to such other rule, law, regulation, or policy which you believe to apply to this case. An issue which may be the basis for an appeal to the City Council or the Land Use Board of Appeals shall be raised not later than the close of the record at or following the ***final*** evidentiary hearing on this case. Such issues shall be raised with and accompanied by statements or evidence sufficient to afford this body, and the parties to this hearing, an adequate opportunity to respond to each issue.

This public hearing will proceed with the staff report and any other comments from governmental agencies that are in attendance; followed by the applicant and all of those who are in support of the application. All of those opposed to the application will then be allowed to speak, followed by those with general comments who are neither for nor against the application. Finally, the applicant will be entitled to a rebuttal period.

Please state your name, physical address, and mailing address clearly into the microphone for the record before your comments. Please try to avoid repetition if someone else has already expressed the same thoughts. It is perfectly alright to state that you agree with the statements of that previous speaker. Please be assured that everyone will have an opportunity to speak.

If you have documents, maps, or letters that you wish to have considered by this body, they must formally be placed in the record of this proceeding. To do that, either before or after you speak; please submit the material with Vickie Nogle who will make sure your evidence is property taken care of.

Prior to the conclusion of the first hearing on a land use application, any participant may request an opportunity to present additional evidence or testimony regarding the application. If such a request is made, it will be up to this body to determine if the hearing will be continued to a time and date certain, or if the record will be kept open for the submission of additional evidence.

CHAIR: With that out of the way, I need to ask the audience and fellow Commissioners a few questions:

1. Does any member of the audience have any objections to the notice that was published?
2. Does any member of the audience wish to challenge the jurisdiction of the Planning Commission to hear this matter?
3. Does any member of the Planning Commission wish to declare a potential or actual conflict of interest or bias?
4. Does any member of the Planning Commission wish to report any site visits or ex-parte contacts?
5. Does any member of the audience wish to challenge the impartiality or ex-parte disclosures of any member of the Planning Commission?

CHAIR: City Planner Holly Byram please give the staff report.

City Planner (Holly Byram): Staff Report

CHAIR: Are there any questions of staff from the Planning Commission before we continue and accept public testimony?

CHAIR: I will now accept public testimony regarding this case.

- Would the applicant or their representative like to speak?
- Is there anyone who would like to speak in support of the application?
- Is there anyone who would like to speak in opposition the application?
- Is there anyone who would like to speak neither for nor against the application (neutral)?
- Would the Planning Commission like the applicant to address any of the testimony?

CHAIR: Before I close or continue the public hearing, are there any additional questions from the Planning Commissioners of staff or anyone? As a reminder, once I close the hearing only Commissioners or staff may speak.

Public testimony is now over. I will close the public hearing at _____ PM. I will now entertain discussion on the application and/or a motion.

CITY OF HUBBARD PLANNING COMMISSION
STAFF REPORT

REPORT: July 14, 2020

HEARING: July 21, 2020

FILE No.: Site Development Review, file #DR 2020-02

APPLICANT: Mike Holleman of MH Custom Cabinets, LLC.

OWNER: Holleman Property, LLC.

LOCATION: 2690 Industrial Avenue, Tax lot 041W33DD00303

SIZE: 75,300 SF (1.73 acres)

REQUEST: The subject property contains one existing 13,000 SF industrial manufacturing building occupied by MH Custom Cabinetry Inc. The applicant proposes to develop a second industrial building 100 ft x 130 ft (13,000 SF) in size. Other proposed site improvements would include expanded paved parking and loading areas. The applicant is also asking the Planning Commission to interpret the definition of "front yard" on a flag lot, as defined and referenced in multiple sections of the Hubbard Development Code. The interpretation will determine the required setback from the western property boundary.

CRITERIA: Hubbard Development Code (HDC):

Section 2.107	Industrial District (I)
Section 2.200	General Development Standards
Section 3.105	Site Development Review

EXHIBITS A: Code Interpretation Summary
B: Application submitted by applicant

I. PROCEDURE & AUTHORITY

A Site Development Review is a Type II Action. A Type II action is a quasi-judicial review in which the Planning Commission applies a mix of objective and subjective standards that allow considerable discretion. Public notice and a public hearing are provided. An appeal of a Type II decision is to the City Council.

II. BACKGROUND

The subject property was configured as a flag lot through Partition 2014-01 (MC PP 2014-14). The property was approved for the development of a "13,000 SF pre-engineered metal building used for manufacturing of custom wood cabinets for homes and offices; 12,250 SF will be devoted to manufacturing, and a two-story, 1,500 SF area will be built out to accommodate an office and show room."

VICINITY MAP:

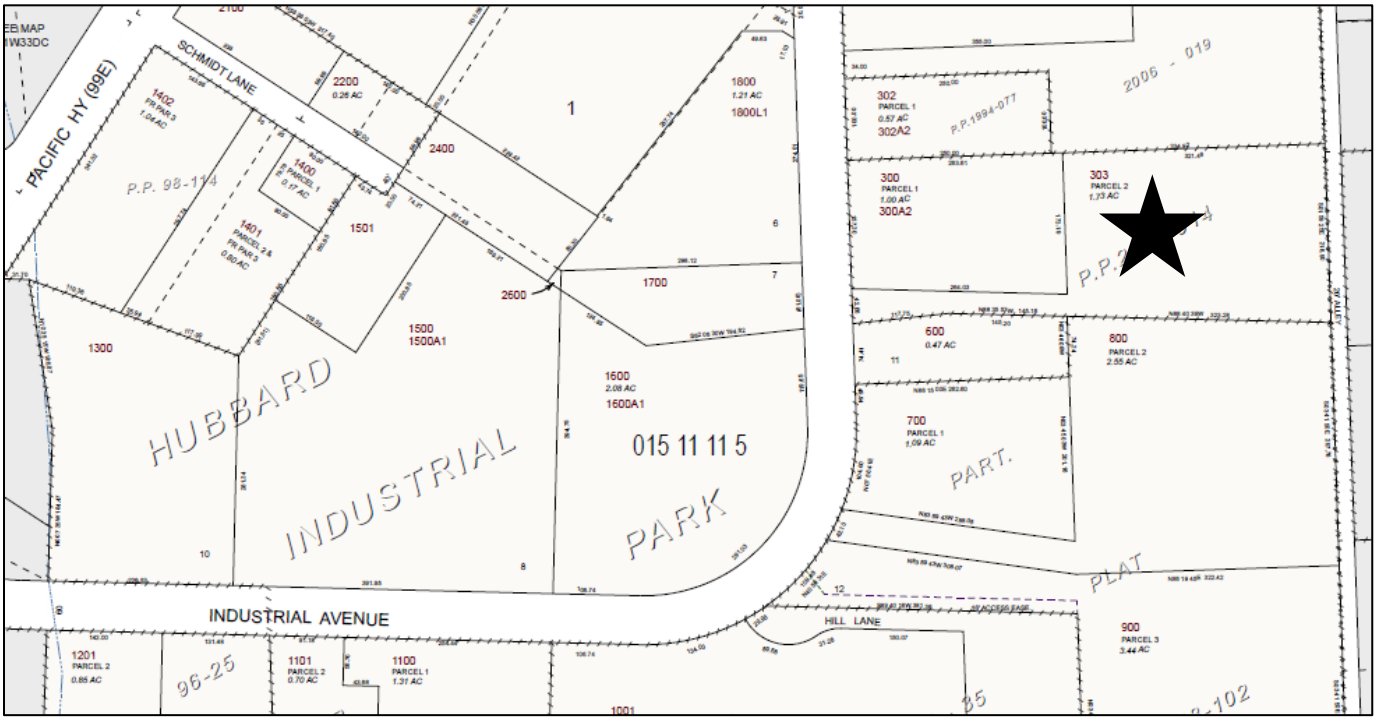

EXISTING CONDITIONS, Aerial Photo Source: Google):

PROPOSED SITE PLAN:

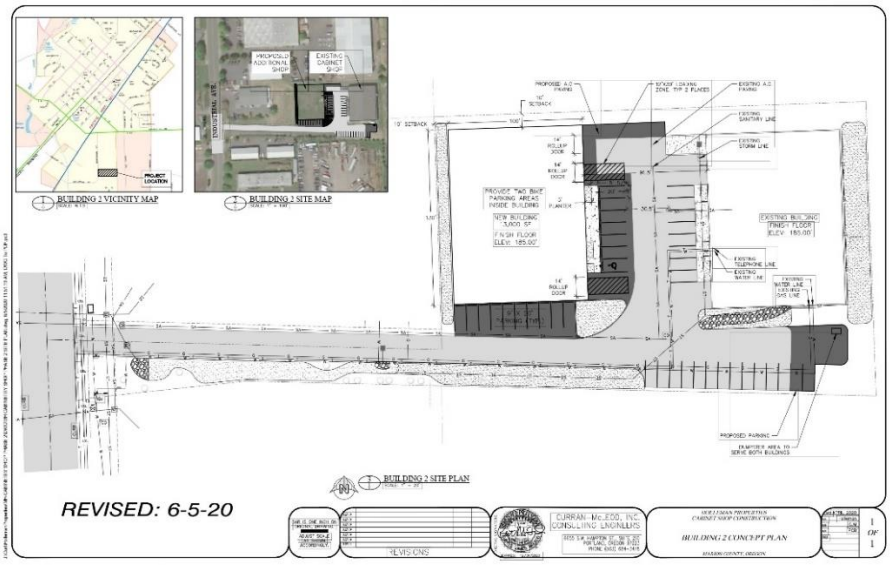

SITE PLAN CROPPED TO ENLARGE:

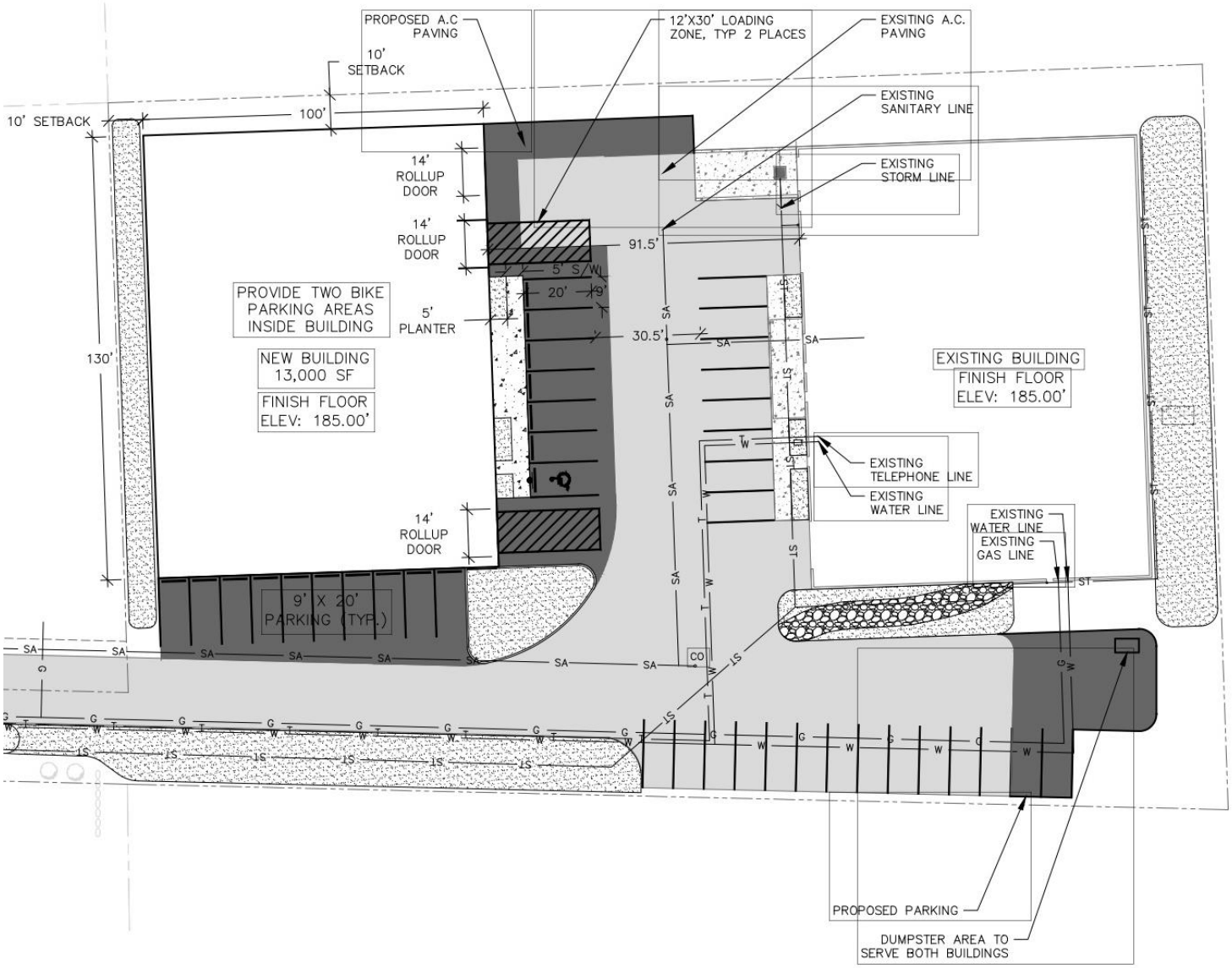

III. REVIEW STANDARDS/CRITERIA

The submitted Site Development was reviewed by the following standards and criteria from the Hubbard Development Code (HDC). Please see attached application for applicant responses to criteria.

3.105 SITE DEVELOPMENT REVIEW

Section 3.105.06 Evaluation of Site Development Plan
The review of a Site Development Plan shall be based upon consideration of the following:

A. Characteristics of adjoining and surrounding uses;

STAFF FINDINGS: The subject property is zoned I-Industrial. The property is located on Industrial Avenue, at the core of Hubbard's industrial district. Neighboring properties to the north, west, and south of the subject property are also zoned I-Industrial. Properties along Industrial Avenue are developed and used consistent with the I Zone. Properties to the east are outside of Hubbard City Limits, within the Urban Growth Boundary, in rural residential use.

The standards for the I-Industrial District are provided in section 2.107 of the Hubbard Development Code (HDC). Consistent with the existing building on this site, cabinet manufacturing is an outright permitted use in the I Zone.

HDC Section 2.107.04 provides the dimensional standards for the I Zone. The maximum building height is 80 feet. The applicant states that the finished height of the building will be 25 feet. The required setbacks of the I zone are front 20 feet, sides abutting industrial district 10 feet, rear abutting a non-industrial district 25 feet. Consistent with the staff interpretation in the original file # DR 2015-04, staff interprets the western property boundary parallel to Industrial Avenue to be the "front." The HDC does not include a diagram, and the applicant disagrees with staff's interpretation. **The applicant has requested that the Planning Commission make a code interpretation about the HDC definition of "front" on a flag lot. Exhibit A includes pertinent information for you.** This issue arose because the proposed building is shown as 10 feet from the western property line, whereas the HDC requires a 20-foot front setback. The property between the proposed building and Industrial Avenue is developed, but the rear of the site is vacant. Development of a second building is feasible on the front property, which would be adjacent to the proposed building under review.

If the Planning Commission agrees with staff's interpretation, the applicant will need to do one of three things (or a combination of them): In compliance with the dimensional standards of the Industrial Zone: 1) apply for a variance to reduce the front setback from 20 feet, 2) revise the building design to provide the required front setback of 20 feet, or 3) revise the drive aisle width between buildings to allow for a front setback of 20 feet minimum.

The following is a screenshot from the original 2015 staff report. It interpreted the western property boundary closest to and paralleling Industrial Avenue as "front."

Based on surrounding uses, required and proposed setbacks are as follows:

	Required (2.107.04)	Proposed
Front Yard (west)	20'	150+'
Side Yard (north)	10'	20'
Side Yard (south)	10'	~60'
Rear Yard (east)*	25'	30'

*Because the rear yard adjoins a 20' alley, the setback distance is measured from the centerline of the alley to the nearest part of the structure.

All development is subject to the minimum landscaping area requirements of HDC Section 2.207.03. Industrial developments are required to provide a minimum of 10% of the gross land area. The applicant states that the existing site plan meets that requirement, and has provided a scan of the original landscaping plan on file. The image quality is not good, so the plant species are not legible. Based upon the Google Streetview image, the landscaping on site does not appear to be entirely consistent with what was approved, but there is some vegetation (grass) on site. The applicable code section HDC 2.207.04 states: "For purposes of satisfying the minimum requirements of this Ordinance, a "landscaped area" must be planted in lawn, ground cover plants, shrubs, annuals, perennials or trees, or desirable native vegetation, or be used for other landscape elements as defined in this Ordinance." Staff finds that the existing lawn would meet this definition. The Planning Commission may consider requiring the applicant to submit a revised landscaping plan which shows the existing and proposed species of plants to satisfy the submittal requirements of this section, but staff does not deem it necessary if there is a sufficient landscape area planted currently. Staff advises the applicant that "Appropriate methods of care and maintenance of landscaped plant material shall be provided by the owner of the property."

Staff recommends a condition of approval that all future fences are constructed in compliance with the HDC Section 2.401.09 Fences, Walls and Hedges, and consistent with the Clear Vision Area guidelines.

No lighting is shown in the submitted plan set. The Hubbard Police Department generally recommends perimeter lighting as well as monitored security systems, to aid nighttime patrol and crime deterrence. If the applicant decides to erect lighting on site, any light used to illuminate a parking or loading area shall be arranged to be directed entirely onto the loading or parking area, shall be deflected away from any residential use, and shall not cast a glare or reflection onto moving vehicles on public rights-of-way. The applicant will need to submit a lighting plan for review and approval by Public Works, to include fixture catalogue cuts showing illumination patterns, prior to issuance of a building permit.

No signage is shown on the site plan. Staff recommends a condition of approval requiring sign review and permitting for all future signs on this property, consistent with HDC 2.206.

In consideration of the proposed development, the characteristics of surrounding uses, and conditions, staff concludes the proposed use can be made compatible with other uses in the vicinity. This standard can be met through compliance with the recommended conditions of approval.

B. drainage and erosion control needs;

STAFF FINDINGS: The HDC Section 2.204 addresses storm drainage requirements. The provisions of that section apply to industrial development. Section 2.204.03 (A) states that "No construction of any facilities in a development shall be permitted until a storm drainage and erosion control plan for the project is prepared by an engineer in the State of Oregon, and approved by the City." The proposed development changes the amount of impervious surface on the site. The applicant states that the stormwater detention swale located south of the access driveway was intentionally over-sized in the original approval to accommodate both buildings. The City Engineer has reviewed the storm water drainage report calculations and agrees that the existing facility has sufficient capacity to accommodate the new building without modifications.

Staff finds that the application meets the drainage and erosion criteria as presented.

C. public health factors;

STAFF FINDINGS: Public health factors pertain to proposed connections to city water and sewer utilities. Water and sewer service lines already serve the site. Private connections to those service lines are reviewed by the County under a plumbing permit. The City Engineer reviewed the applicant's submitted plan set and had no comments pertaining to water or sewer capacity. Staff finds that the applicant can meet the public health factors through compliance with the recommended conditions of approval regarding public works standards and procedures.

D. traffic safety, internal circulation and parking;

STAFF FINDINGS: Industrial Avenue is classified as a local street in the Hubbard Transportation System Plan (TSP) adopted in 2012. The public street right-of-way is 60 feet wide. As such, no additional right of way is required to be dedicated. The curb cut and access road are existing facilities. No changes are proposed to either with this application. No street improvements are required. Sidewalks are already in place adjacent to the driveway along the frontages; no additional sidewalk improvements are required.

Image: Industrial Avenue frontage of subject property. Source: Google Streetview, July 2020

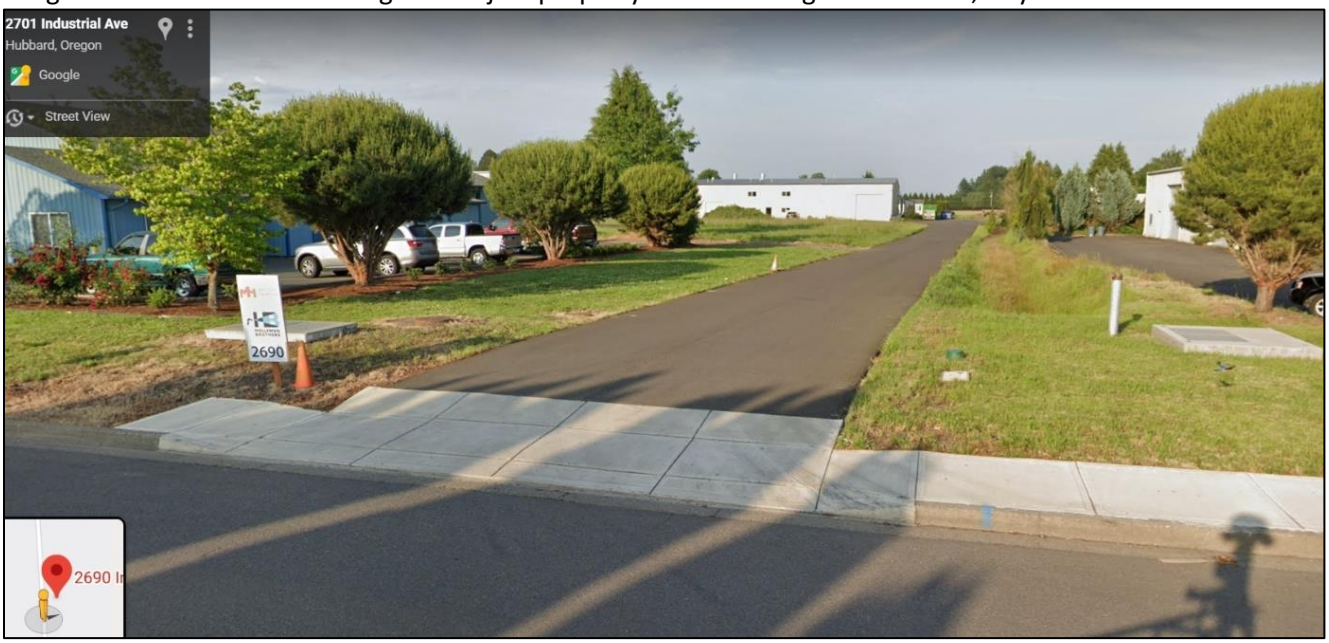

The HDC section 2.203.07 addresses parking and loading area development requirements. Section (A) states that all driveways, parking, maneuvering, and loading areas shall have a durable hard surface. The applicant is proposing to pave the full parking, maneuvering, and loading areas. New asphalt is indicated on the site plan adjacent to the existing asphalt of a lighter color on the site plan.

Two-way drives are required to have a minimum improved width of at least 20 feet, exclusive of parking spaces. The two-way access driveway appears to meet the minimum width of the 20 feet. The access driveway proposed between the two buildings is shown as 30.5 feet in width to allow for backing movements of large vehicles.

HDC section 2.203.05 establishes off-street parking ratios required by development type:

Q. Industrial, manufacturing and processing: 1. 0-24,900 sq. ft.	1 space per 700 sq. ft.

The applicant is proposing to add 13,000 SF of manufacturing space to the site. As such, a total of 13,000/700 = 19 new parking spaces are required. The submitted site plan shows 20 existing parking spaces, and 19 new parking spaces, one of which is designated as an ADA space, though no van loading zone is shown. The new parking spaces are labeled as 9 feet x 20 feet, which meets the city standard.

HDC Section 2.203.06 Off-Street Loading Requirement:

Industrial buildings between 5,000 and 30,000 SF in size are required to provide a minimum of one loading zone at least 12 feet wide by 30 feet long by 14 feet in height. The submitted plan shows two loading zones. This standard is met.

HDC Section 2.203.09 Parking of Bicycles:

Land Use Category	*Minimum Required Bicycle Parking Spaces*	*Minimum Covered Amount*
Manufacturing	2 or 0.15 space per 1000 ft^2, whichever is greater	100%

13,000 SF * 0.15 = 1.95. The applicant is required to provide two bicycle parking spaces to the standards described in HDC 2.203.09(C). The new building is labeled with "provide two bicycle parking areas inside building." This is recommended as a condition to be demonstrated, prior to final occupancy.

Staff finds the request can meet all traffic safety, internal circulation, and parking requirements through compliance with the recommended condition of approval.

E. provision for adequate noise and/or visual buffering from non-compatible uses;

STAFF FINDINGS:
The HDC states the following about screening:

2.207.05 Screening and Buffering
A. Screening shall be used to eliminate or reduce the visual impacts of the following:
1. service areas and facilities, including garbage and waste disposal containers, recycling bins and loading areas;
2. outdoor storage and outdoor display areas;
3. parking areas for 20 or more vehicles for multi-family developments, or 30 or more vehicles for commercial or industrial uses;
4. at and above-grade electrical and mechanical equipment, such as transformers, heat pumps, and air conditioners; and
5. any other area or use as required by this Ordinance.
B. Screening may be accomplished by the use of sight-obscuring plant materials (generally evergreens), earth berms, walls, fences, building parapets, building placement or other design techniques.

The applicant states that no new outdoor storage areas are proposed. The applicant has identified the trash and recycling bin location shared by the two buildings at the southeast corner of the site. No screening exists or is proposed. Staff recommends a condition of approval requiring a fenced enclosure for the bins, or other acceptable method of screening consistent with HDC 2.207.05. Alternatively, the applicant may consider planting a row of screening/buffering trees along the short eastern property boundary which borders along rural residential properties.

With the additional 19 new parking spaces, the total parking spaces now number 39. While this would normally trigger the screening requirement above 30 spaces, staff notes that the parking areas are not consolidated, and that the buildings will obscure view of a portion of the parking spaces. For this reason, staff does not recommend additional screening beyond that of the dumpsters area.

Staff finds this criterion can be met by compliance with the conditions of approval addressing screening.

F. retention of existing natural features on site;

STAFF FINDING: The subject property is already developed with an industrial building and parking lot. No significant natural features have been identified on site. Staff finds this criterion does not apply.

G. connectivity of internal circulation to existing and proposed streets, bikeways, and pedestrian facilities; and

STAFF FINDING: Staff finds the submitted site plan does not demonstrate an internal pedestrian connection to the sidewalk in the public right-of-way, but that the access driveway is an existing facility. Staff recommends the Planning Commission discuss whether a dedicated pedestrian connection to Industrial Avenue is required, or whether the existing 20-foot wide access road provides sufficient visibility for vehicles, bicycles, and pedestrians sharing the driveway. A separate facility or special painted striping was not required with the original condition of approval in DR 2015-04.

H. problems that may arise due to development within potential hazard areas.

STAFF FINDING: No hazard areas are identified, although drainage is always a concern with hydric soils in the area. Poor area drainage increases the importance of an engineered and functional drainage plan. Staff finds that this criterion does not apply.

IV. STAFF CONCLUSIONS & RECOMMENDATION

Based on the findings contained in this report, Staff concludes that the application (File DR 2020-02) can be found to comply with the applicable criteria, subject to compliance with the recommended conditions of approval listed below.

V. RECOMMENDED CONDITIONS OF APPROVAL

Staff recommends APPROVAL of the application, subject to the following conditions of approval:

A. It is the responsibility of the applicant to obtain copies of and be familiar with all applicable codes and standards, including but not limited to required bonds. Conformance to City of Hubbard Design and Construction standards is required. Compliance with Conditions of Approval shall be the sole responsibility of the applicant.

B. Applicant shall be responsible for all costs of public and private infrastructure improvements associated with the development.

C. REVISED SITE PLAN: Prior to issuance of any building permits, the applicant shall submit a final site plan which demonstrates compliance with these conditions of approval. Plans shall clearly show all existing and proposed easements on the lot.

D. BUILDING PERMITS: A copy of all Marion County Building Permit(s) shall be furnished to the City.

E. AS-BUILTS: As-built plans shall be submitted to the City for review and approval at the completion of construction. Submit three (3) paper copies and one (1) electronic file in Arcview/ArcGIS 9 format.

F. FRONT SETBACKS: In compliance with the dimensional standards of the Industrial Zone, the applicant shall do one of three things (or a combination): 1) apply for a variance to reduce the front setback from 20 feet, 2) revise the building design to provide the required front setback of 20 feet, or 3) revise the drive aisle width to allow for a front setback of 20 feet minimum.

G. UTILITIES:

1. Private water, sanitary sewer and storm drain systems on private property are reviewed and approved by Marion County (Plumbing Permit).
2. All utility work must be in accordance with the Oregon Health Authority (OHA) and the Oregon Department of Environmental Quality (DEQ).

H. PARKING: Hard surfaced parking areas shall be developed in compliance with specifications of HDC 2.203.07 and the Public Works Design Standards.

I. BICYCLE PARKING: Prior to final occupancy, the applicant shall demonstrate provision of the minimum number of bicycle parking spaces required by the HDC Section 2.203.

J. WHEEL STOPS: Prior to final occupancy, parking spaces along the outer boundaries of a parking area shall be contained by a curb or a bumper rail at least 4" high, located a minimum of 3 feet from the property line, to prevent a motor vehicle from extending over an adjacent property.

K. CLEAR VISION AREAS. Clear vision areas shall be maintained in accordance with HDC 2.209.07.

L. LIGHTING: If lighting is proposed, applicant shall submit a lighting plan for review and approval by Public Works. Any light used to illuminate a parking or loading area shall be arranged to be directed entirely onto the loading or parking area, shall be deflected away from any residential use and shall not cast a glare or reflection onto moving vehicles on public rights-of-way. The applicant shall provide fixture catalogue cuts showing illumination patterns.

M. DUMPSTER AREA SCREENING: Prior to occupancy, the applicant shall install a screened enclosure for the waste and recycling bins, or other acceptable method of screening consistent with HDC 2.207.05.

N. FENCES: All fences shall be constructed in compliance with the HDC 2.401.09 Fences, Walls, and Hedges.

O. SIGNS: The applicant is advised that signs must comply with Section 2.206, and may require a building permit prior to installation. Applicant shall submit renderings and plans for all signs to the City, and must receive all applicable approvals prior to installation.

P. ADDRESS: Prior to final occupancy of the new structure, the applicant shall post the address in minimum six-inch numbers.

Q. EXPIRATION OF APPROVAL: Site Development Review approvals shall be effective for a period of two (2) years from the date of written approval. If substantial construction of the approved plan has not begun within the two (2) year period, the approval shall expire. The applicant may request an extension of the approval for a period of one (1) year. A request for an extension of approval shall be submitted in writing at least thirty (30) days prior to the expiration date of the approval period. The project shall be constructed according to all approved plans. The approval shall be voided immediately if construction is a departure from the approved plan.

VI. PLANNING COMMISSION OPTIONS

A. Motion to APPROVE Site Development Review file #DR 2020-02, and adopt the recommended findings and conditions of approval contained in the Staff Report dated July 14, 2020, as presented.

B. Motion to APPROVE Site Development Review file #DR 2020-02, and adopt the recommended findings and conditions of approval contained in the Staff Report dated July 14, 2020, as REVISED by the Planning Commission (stating those revisions).

C. DENY Site Development Review file #DR 2020-02 with amended findings that the application does not meet the applicable approval criteria.

D. CONTINUE the hearing, to a date and time certain, if additional information is needed to determine whether applicable standards and criteria are sufficiently addressed.

EXHIBIT A:
APPLICABLE CODE SECTIONS FOR PLANNING COMMISSION INTERPRETATION
FRONT SETBACK ON A FLAG LOT

1.200 DEFINITIONS

Flag Lot: *A lot that has frontage on and primary access to a street by means of a "flag pole".*

Flag Pole: *That portion of a flag lot that is a narrow strip of land providing primary frontage and access to the main body of the lot.*

Frontage: *All the property abutting one side of a street that is between intersecting or intercepting streets, or that is between an intersection and a dead-end. Lot frontage is the part of a lot that abuts a street.*

Lot Line, Front: *The property line separating the lot from the street, other than an alley. In the case of a corner lot, the shortest property line along a street, other than an alley.*

Yard, Front: *A yard extending across the full width of the lot, between the front portion of a main building and the front lot line. The depth of front yard is the minimum horizontal distance between the front lot line and the nearest point of the foundation of the main building.*

2.208 DEVELOPMENT STANDARDS FOR LAND DIVISIONS

2.208.03 Standards for Lots or Parcels

E. Flag Lots. Where authorized by the Planning Commission pursuant to the access requirements of Section 2.202.07, flag lots shall be subject to the following development standards:

1. *<u>The property line running parallel to the access road shall be considered the front yard line and shall be used to calculate front yard setback requirements.</u>*

2.208.03 Standards for Lots or Parcels …

C. Access. *All lots or parcels created after the effective date of this Ordinance shall provide a minimum of 25 feet of frontage on an existing or proposed public street, with the following exceptions:*

1. Residential lots or parcels, excluding townhouse developments and Planned Unit Developments, may be accessed via a private street developed in accordance with the provisions of Section 2.202 when the Planning Commission finds that public street access is:

a. unfeasible due to parcel shape, terrain, or location of existing structures; and
b. unnecessary to provide for the future development of adjoining property.

2. Lots or parcels in townhouse developments or Planned Unit Developments may be accessed via public or private streets, in accordance with the following standards:

a. Internal local streets or drives may be private and shall be subject to the provisions of Section 2.202.
b. Collector and arterial streets shall be public and shall comply with the applicable provisions of Section 2.202.
c. Local streets which are needed to provide access to adjoining properties shall be public and shall comply with the applicable provisions of Section 2.202.

3. Commercial or industrial uses located in a campus or park-like development may be accessed via private streets when developed in accordance with Section 2.202.07.

4. Abutting flag lots with a shared access drive, where each flag lot has a minimum of 12 ½ feet of frontage on a public street.

E. Flag Lots. *Where authorized by the Planning Commission pursuant to the access requirements of Section 2.202.07, flag lots shall be subject to the following development standards:*

1. The property line running parallel to the access road shall be considered the front yard line and shall be used to calculate front yard setback requirements.

2. The access strip shall be a minimum of 25 feet in width. The improved surface shall be a minimum of 12 feet in width.

3. The access strip shall not be included in the calculation of lot area for purposes of determining compliance with any minimum lot size provision of this Ordinance.

4. If the length of the access strip exceeds 200 feet, the access strip shall be developed as a private street and shall conform to the standards of Section 2.202.07.

5. Where two flag lots abut, access shall be via a shared drive wherever possible. Shared drives shall be developed as private streets and shall conform to the standards of Section 2.202.07.

STAFF INTERPRETATION:

The Hubbard Development Code differentiates “access road” from “access strip” and “access drive.” The “access road” is intended to be the public street where a minimum of 25 feet of access/frontage is required for every legal lot. The “access strip” is the flag pole. The “access drive” is the driveway on the flag pole.

The code should better define “access road” as the public street or other access road per HDC 2.208.03(C).

This interpretation is consistent with the way the setbacks were measured in the staff review of the first building, which listed the front (west) setback as 150 feet+.

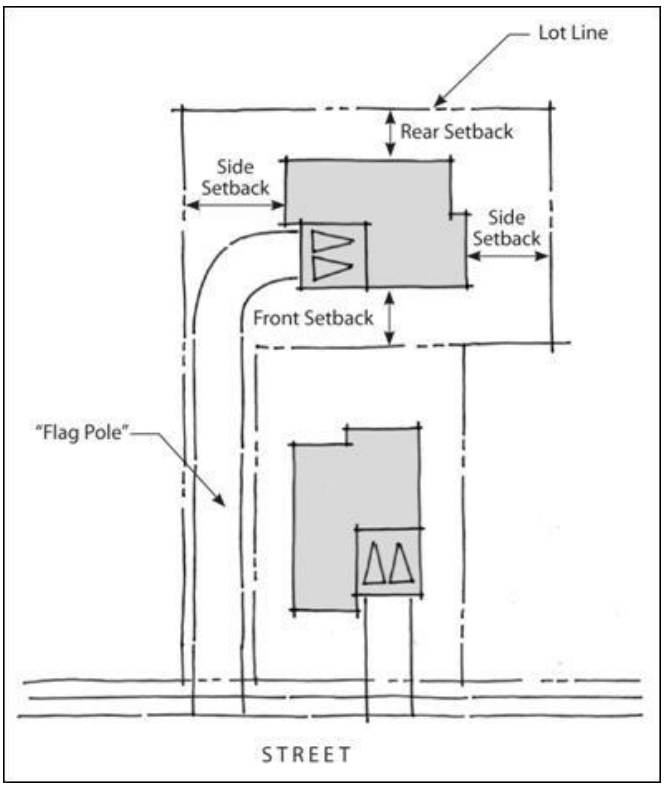

WESTERN BOUNDARY PARALLELING INDUSTRIAL AVE IS "FRONT." SETBACK SHOULD BE 20 FT RATHER THAN 10 FT, OR APPLY FOR VARIANCE.

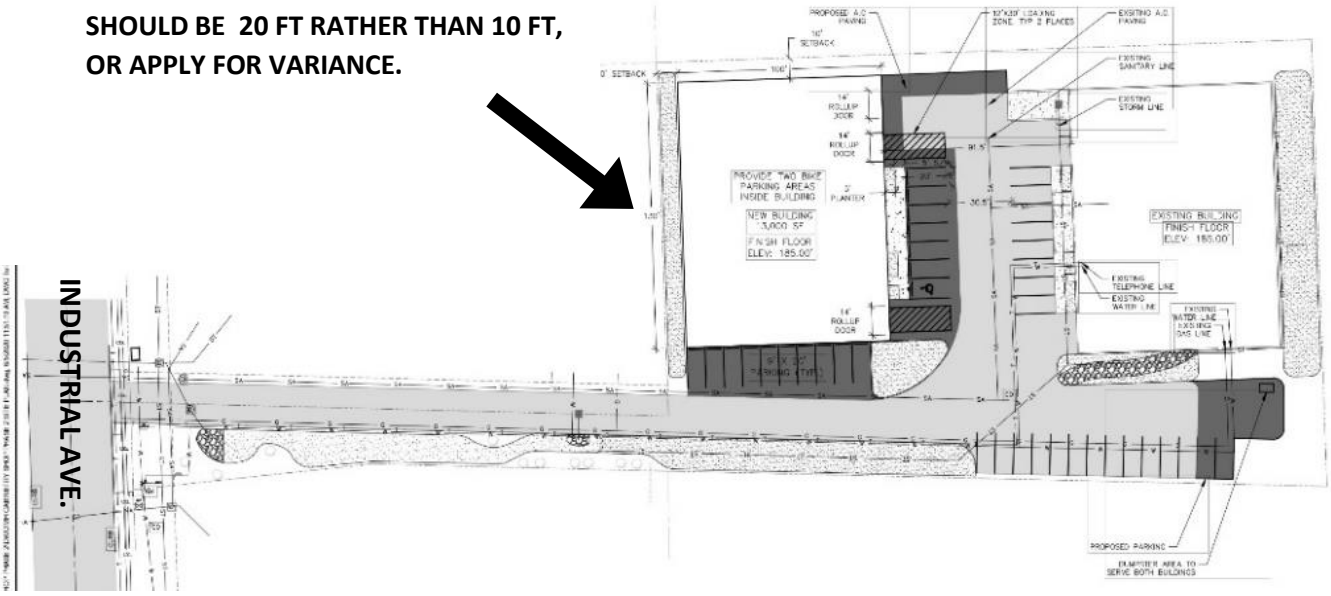

EXHIBIT B:

APPLICATION MATERIALS SUBMITTED BY APPLICANT

SITE DEVELOPMENT REVIEW APPLICATION

CITY OF HUBBARD
3720 2nd Street (P.O. Box 380)
Hubbard, OR 97032
Phone: (503) 981-9633; Fax: (503) 981-8743
http://www.cityofhubbard.org

To Be Filled Out by Staff:
FILE: DR 2020-02
DATE: 5/7/2020
FEE: 2500
RECEIPT NO: 1.009744

APPLICANT: Mike Holleman

MAILING ADDRESS: 2690 Industrial Avenue, Hubbard, OR 97032

PHONE: (503) 980-9333 EMAIL ADDRESS: Mike@MHCustomCabinetry.com

OWNER(S) (If different from above): Same

PHONE: Same EMAIL ADDRESS:

ADDRESS:

PROPOSED STRUCTURE/IMPROVEMENT: Construction of second planned building on existing approved industrial site

SQUARE FOOTAGE: 100' x 130' total 13,000 SF

ESTIMATED VALUE OF STRUCTURE/IMPROVEMENT: $400,000

PROPERTY DESCRIPTION:

ADDRESS: 2690 Industrial Avenue, Hubbard, OR 97032

MAP PAGE AND TAX LOT NO: 041W33DD00303 ZONE: Industrial (I)

CURRENT USE/STRUCTURES: 13,000 SF Manufacturing SQUARE FOOTAGE OF SITE: 75,300 SF

ZONE:

SUBMITTAL REQUIREMENTS:

Please submit one (1) legible copy, drawn to scale on 8 ½ x 11 or 11 x 17 inch paper and one (1) electronic copy (PDF format preferred); OR eight (8) full-size copies (typically 18 x 24-inch or larger paper), one (1) reduced-size copy (8 1/2 x 11 or 11 x 17-inch), and one (1) electronic copy (PDF format preferred) of the following application materials:

1. Site Analysis
   - ☒ Existing site topography;
   - ☒ Identification of areas exceeding 10% slopes;
   - ☒ Site drainage, areas of potential flooding;
   - ☒ Areas with significant natural vegetation;
   - ☒ Classification of soil types;
   - ☒ Existing structures, roadway access and utilities; and
   - ☒ Existing and proposed streets, bikeways, and pedestrian facilities within 200 feet.

2. Site Plan
   - ☒ Proposed grading and topographical changes;
   - ☒ All proposed structures including finished floor elevations and setbacks;
   - ☒ Vehicular and pedestrian circulation patterns, parking, loading and service areas;
   - ☒ Proposed access to public roads and highways, railroads or other commercial or industrial transportation systems;
   - ☒ Site drainage plan including methods of storm drainage, sanitary sewer system, water supply system and electrical services. Inverse elevations may be required for all underground transmission lines;
   - ☒ Proposed landscape plan, to include appropriate visual screening and noise buffering, where necessary, to ensure compatibility with surrounding properties and uses;
   - ☒ Proposed on-premise signs, fencing or other fabricated barriers, together with their heights and setbacks; and
   - ☒ A schedule of expected development.

EVALUATION CRITERIA

In addition to compliance with the standards of the Development Code, the review of a Site Development Plan shall be based upon consideration of the following:

1. Characteristics of adjoining and surrounding uses;
2. Drainage and erosion control needs;
3. Public health factors;
4. Traffic safety, internal circulation and parking;
5. Provision for adequate noise and/or visual buffering from non-compatible uses;
6. Retention of existing natural features on site; and
7. Problems that may arise due to development within potential hazard areas.

I HEREBY CERTIFY THAT ALL STATEMENTS CONTAINED HEREIN, ALONG WITH THE EVIDENCE SUBMITTED, ARE IN ALL RESPECTS TRUE AND CORRECT; AND THAT THE REQUEST DOES NOT VIOLATE ANY DEED RESTRICTIONS THAT MAY BE ATTACHED OR IMPOSED UPON THE SUBJECT PROPERTY. (NOTE: ALL OWNERS MUST SIGN THIS APPLICATION OR SUBMIT LETTERS OF CONSENT. INCOMPLETE OR MISSING INFORMATION MAY DELAY THE APPROVAL PROCESS.)

5-5-2020	
Date	Applicant
5-5-2020	
Date	Owner(s)
Date	Owner(s)

Revised: 9/19/08

_____ _____

Date Owner(s)

SITE DEVELOPMENT REVIEW INFORMATION SHEET

The purpose of the site development review process is to guide future growth and development in accordance with the Hubbard Comprehensive Plan and Development Code, provide an efficient process and framework to review development proposals, and resolve potential conflicts that may arise between proposed developments and adjacent uses.

☑ SITE DEVELOPMENT REVIEW REGULATION

Site development review is required for all new developments, major remodeling of existing developments, and change of occupancy, as defined by the Uniform Building Code, and/or change of use for commercial and industrial developments, except:

1) single-family detached dwellings;
2) a duplex;
3) any commercial or industrial remodel that does not exceed 25% of the total square footage of the existing structure, or
4) any new development, change of occupancy, or commercial or industrial remodel, that does not intensify he use of the property by increasing the number of customers, vehicle or pedestrian traffic top the site, parking requirements, etc.

Site development review procedures are listed in Section 3.105 of the Development Code.

☑ APPLICATION PROCESSING

Once an application is submitted, along with all pertinent filing information, City staff will review it for completeness, and if additional material is necessary, you will be contacted. Once the application is determined to be complete, a public hearing at the Planning Commission will be scheduled. Staff will prepare a report for Planning Commission review. The staff report is available seven days prior to the Planning Commission meeting. You will have the opportunity to testify on behalf of your application at the Planning Commission meeting. The Planning Commission decision can be appealed to the City Council.

☑ EFFECTIVE DATE OF APPROVAL

The site development review shall be effective 12 days after the date of the notice of the decision by the Planning Commission unless the decision is appealed to the City Council.

☑ ADDITIONAL INFORMATION

For additional information, call Hubbard City Hall at (503) 981-9633.

Revised: 9/19/08

EXHIBIT A

LAND USE FEE SCHEDULE ACKNOWLEDGMENT

as of 2/11/2020 (attachment to Resolution No. 686-2020)

Resolution No. 685-2020 requires land use applications to reimburse the City for the actual costs associated with their applications. The City requires a deposit for land use application as required in section 3.206.03 in the Hubbard Development Code. Staff collects the deposit at the time of application.

Costs and time are paid out of the deposit. If it appears the costs exceed the initial deposit, the Director of Administration/City Recorder may require an additional deposit for costs that may be incurred to complete the project. At the end of the project a final bill will be prepared, and the City will either request additional funds or issue a refund check.

The following are examples of the most common types of charges and amounts per hour that will be incurred for land use projects in the City. These rates are provided for example purposes only, and you will be charged the actual costs incurred by the City as required by Resolution 685-2020. These example rates will therefore be reviewed annually and updated as necessary. You may request a copy of the most recent example rates at any time by contacting the Director of Administration/City Recorder.

City Planner **$85.00**
(The City Planner prepares staff reports, final actions, and makes presentations at Planning Commission and Council meetings.)

City Engineer **$165.00**
(The City Engineer may be requested to investigate or review plans submitted by the applicant, and may make presentations at required meetings)

Director of Admin/Recorder **$90.00**
Admin Assistant **$45.00**
(The Planning Secretary prepares applicants files, prepares comments for other departments, prepares public hearing notices, posts and mails notices, answers applicants questions and attends all meetings)

Public Works Director/Superintendent **$84.00**
Public Works Admin Manager **$68.00**
Utility Worker II **$58.00**
Utility Worker I **$37.00**
Admin Assistant **$20.00**
(The Public Works personnel reviews applications and comments regarding water, sewer, streets, backflow devices, and storm drain issues)

Police Chief **$83.00**
(The Police Chief reviews plans and looks into safety concerns such as lighting and addressing issues)

City Attorney **$235.00**
(Review of documents, negotiation of conflicts, litigation and enforcement issues)

Office Copies **(Black & White 8 ½ X 11)** **.25 per page**
Color .35 per page
(Black & White 11X 17) **.50 per page**
Color .70 per page

Long Distance Phone Calls **$3.00 per call**
Fax **$2.00 per fax + .50 per page**

I have read this information and understand that the land use fee is a deposit and the application may cost more or less.

Applicants Signature 5-5-2020 **Date**

T:\RECORDER\RESOLUTIONS\686-2020 LAND USE FEE ACKNOWLEDGMENT EXHIBIT A.DOCX

MH CUSTOM CABINETRY
SITE DEVELOPMENT REVIEW APPLICATION
Support Information

2690 Industrial Avenue
Hubbard, OR 97032

This proposed improvement is for construction of the seconded planned industrial building on the current industrial site at 2690 Industrial Avenue. The original 13,000 SF building and site improvements were approved on June 17, 2015 as file number SDR-2015-04. The original site plans included the footprint of the second industrial building, which is now the subject of this current application.

The proposed 13,000 SF building is intended to be used for general manufacturing. All infrastructure improvements to support the second building are in-place having been constructed as part of the original development.

The site improvements were designed in 2015 to accommodate the second building. As a result, the as-built site improvements are submitted with this application with the following narrative to demonstrate compliance with the development requirements.

1. SITE ANALYSIS

Existing Site Topography – The site is relatively flat as shown on the site plan contours on the attached plans.

Areas Exceeding 10% slopes – No areas on the site exceed 10% slopes.

Site Drainage, Areas of Potential Flooding – There are no areas susceptible to flooding on the site. The existing stormwater collection, detention and disposal system was designed with 50% surplus capacity to accommodate the additional runoff created by the second building. No additional stormwater improvements are proposed.

Areas with Significant Natural Vegetation – The site has been developed and landscaped as required to meet the requirements of the 2015 development approval. The site of building number 2 is a vacant grass area with no significant vegetation. The proposed second building will not impact any of the existing landscaped area or plantings.

Classification of Soil Types – The site is predominately Amity Silt Loam (Am) which is characterized as poorly drained with slopes of 0 – 3%. The general limitation of this soil is a high groundwater table. If irrigated and drained Amity Silt Loam is classified as Class 2 farm land.

Existing Structures, Roadway Access and Utilities – The site was fully developed as approved by SDR-2015-04, and currently has an existing 13,000 SF industrial building and all infrastructure improvements, including sewer, water, stormwater and all private utilities, are in-place to serve the proposed second building. Access improvements to Industrial Avenue were constructed as

part of the 2015 improvements, and the frontage is fully improved to City standards with concrete curb, sidewalk and driveway.

Existing and Proposed Streets, Bikeways, and Pedestrian Facilities within 200 feet – The subject property and the adjacent property to the south on Industrial Way have fully developed frontage improvements including concrete curb, sidewalks, driveways and landscaping. The adjacent property to the north has curb and landscaping but no sidewalk. No additional street, bikeways or pedestrian facilities are proposed as part of the second building construction.

2. SITE PLAN

Proposed Grading and Topographical Changes – No revisions to the existing site grading are proposed to accommodate the second building. The existing site grading is shown on the attached 2015 as-constructed plans sheet C3.

All Proposed Structures, Floor Elevations and Setbacks – The new building is a copy of the existing building and will have similar architectural features. The finished floor elevation will match the existing building finished floor. The new building was shifted 10 feet further north than was shown on the site plan in 2015 in order to provide additional depth for parking on the south side of the building. The existing site plan from 2015 is shown on sheet C6 of 11, and the proposed new building site plan is shown on sheet 1 of 1.

The proposed plan for the second building shows a 10-foot setback adjacent to existing industrial development on both the north and west side of the building. The code requirements for side yard setbacks in the Hubbard Development Code section 2.107.104 is 10 foot for side yards and 20 foot for front yards. The front yard 20-foot setback is interpreted to be the setback from the public right of way and was not applied to the west side of the proposed building. This is requested in order to provide more clearance between the two buildings for traffic to maneuver.

Vehicular and Pedestrian Circulation Patterns, Parking, Loading and Service Areas - The existing driveway provides adequate circulation for all traffic on the site. The traffic pattern allows vehicles to enter the site and provides sufficient area to turn around without backing into the public right of way.

The new building will require an additional 18 parking spaces at 1 per 700 sf of floor area per the HDC 2.203.05, including one handicapped accessible space; one loading space per 2.203.06.; and seven bicycle parking spaces at ½ per 1,000 sf of floor area per 2.203.09. All vehicle parking areas are shown on the plans. Bicycle parking will be field located. All parking can be provided without encroaching on the required 20-foot fire lane.

Service access to the new building is provided by the three large overhead doors.

The traffic routes are shown on the proposed site plan sheet 1 of 1

Proposed Access to Public Roads – Access to the site was constructed as part of the 2015 site development. No modifications are proposed for the access driveway or street frontage..

Site Utility Plans – All site utilities, including stormwater drainage, sanitary sewer service, water supply, electrical service, cable and communications were installed to serve the new building as a component of the 2015 site development as shown on the attached as-built plans sheet C7. Storm water is collected and detained in the existing bioswale. The swale was designed with approximately 150% of the minimum required in 2015 (3,240 CF provided vs 2,200 CF required) to provide for the second building.

A new fire hydrant and Fire Department Connection as required by the Hubbard Fire Department was provided as part of the 2015 improvements. That service is able to serve the fire protection needs of the second building.

Landscape Plan – Landscaping of the site was provided as a component of the 2015 improvements. A total of 9,840 SF of landscaping area was provided, equating to 13% of the total siter area. With improvement of the second building, the areas contained in the north and west setbacks will be improved with groundcover.

Proposed Signs, Fencing or other barriers – No additional fencing or barriers are proposed with building number 2. The street address will be added to the sign on Industrial Avenue. Depending upon the occupancy of the new building, a new sign may be desired. Any new signage will be submitted for approval as a separate application.

Schedule of Development – Design of building two will be initiated upon approval od the Site Design Review, and a building permit application is anticipated to be submitted ion the fall of 2020. Construction will follow with completion anticipated by the spring of 2021.

In summary, this site was developed in 2015 with the all required provisions to support the addition of a second building. The proposed improvement will comply with the Hubbard Development Code and will provide additional industrial growth in the City of Hubbard. The site is on a flag lot so the improvement has minimal visibility from the public right of way.

Attached is a copy of the record drawings of the 2015 site development, and a proposed site plan for building number 2.

1 BUILDING 2 VICINITY MAP
SCALE: N.T.S.

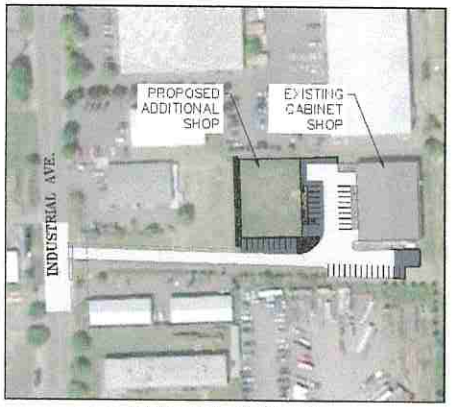

2 BUILDING 2 SITE MAP
SCALE: 1" = 100'

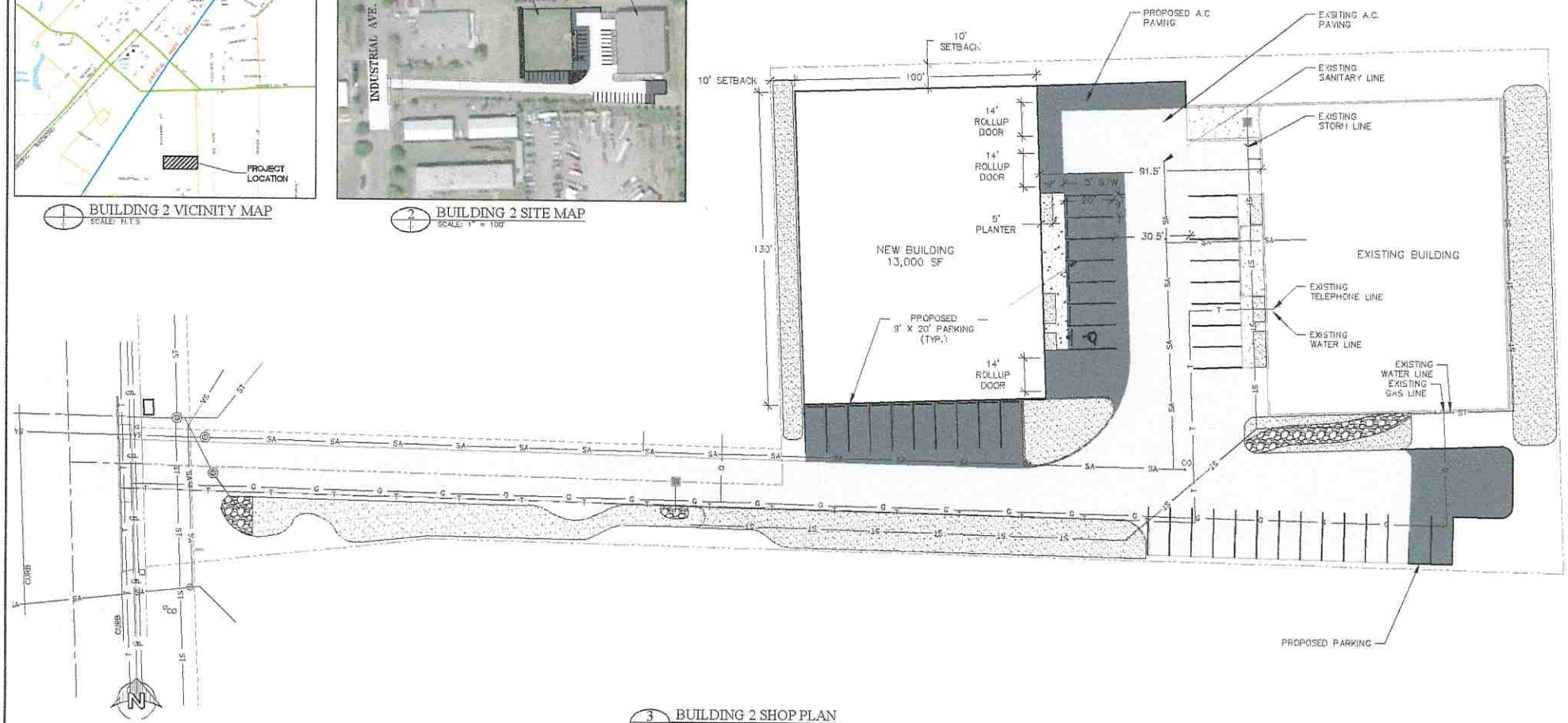

3 BUILDING 2 SHOP PLAN
SCALE: 1" = 20'

BAR IS ONE INCH ON ORIGINAL DRAWING. ADJUST SCALE AS SHOWN ACCORDINGLY.

REV #		
REV #		
REV #		
REV #		
REV #		
REV #		
REV #		

REVISIONS

REGISTERED PROFESSIONAL ENGINEER
OREGON
JULY 28, 1992
CURTIS JAMES McLEOD
ORIGINAL SIGNATURE
EXPIRES: 12-31-2020

CURRAN-McLEOD, INC.
CONSULTING ENGINEERS
6655 S.W. HAMPTON ST., SUITE 210
PORTLAND, OREGON 97223
PHONE (503) 684-3476

HOLLEMAN PROPERTIES
CABINET SHOP CONSTRUCTION

BUILDING 2 CONCEPT PLAN

MARION COUNTY, OREGON

DATE	APRIL 2020
DR.	Holleman
D.E.	CJM
D.T.	PCB
CKD.	

1 OF 1

J:\Curt\HollemanProperties\MH-CABINETRY SHOP PHASE 2\DWG\MH-CABINETRY SHOP PHASE 2 SITE PLAN.dwg, 4/30/2020 10:46:34 AM, DWG To PDF.pc3

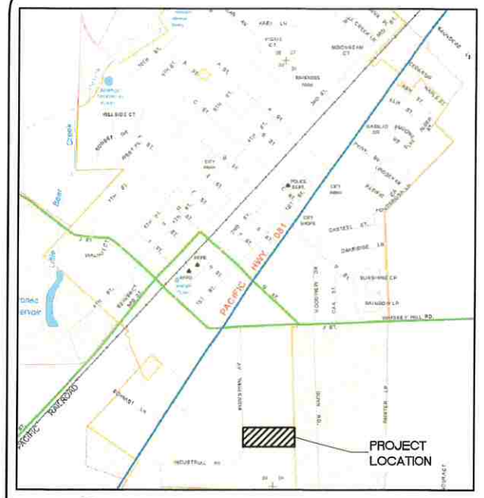

1 BUILDING 2 VICINITY MAP
SCALE: N.T.S

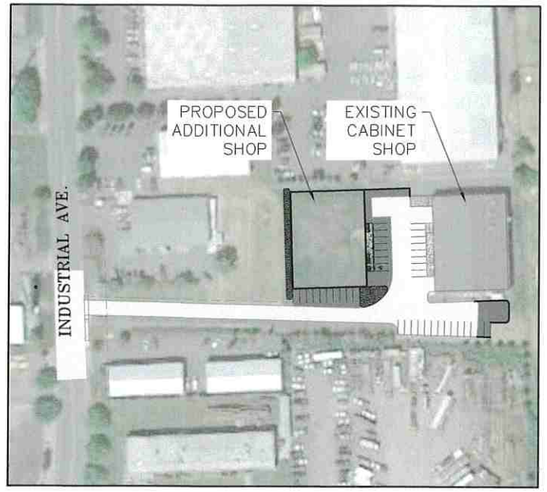

2 BUILDING 2 SITE MAP
SCALE: 1" = 100'

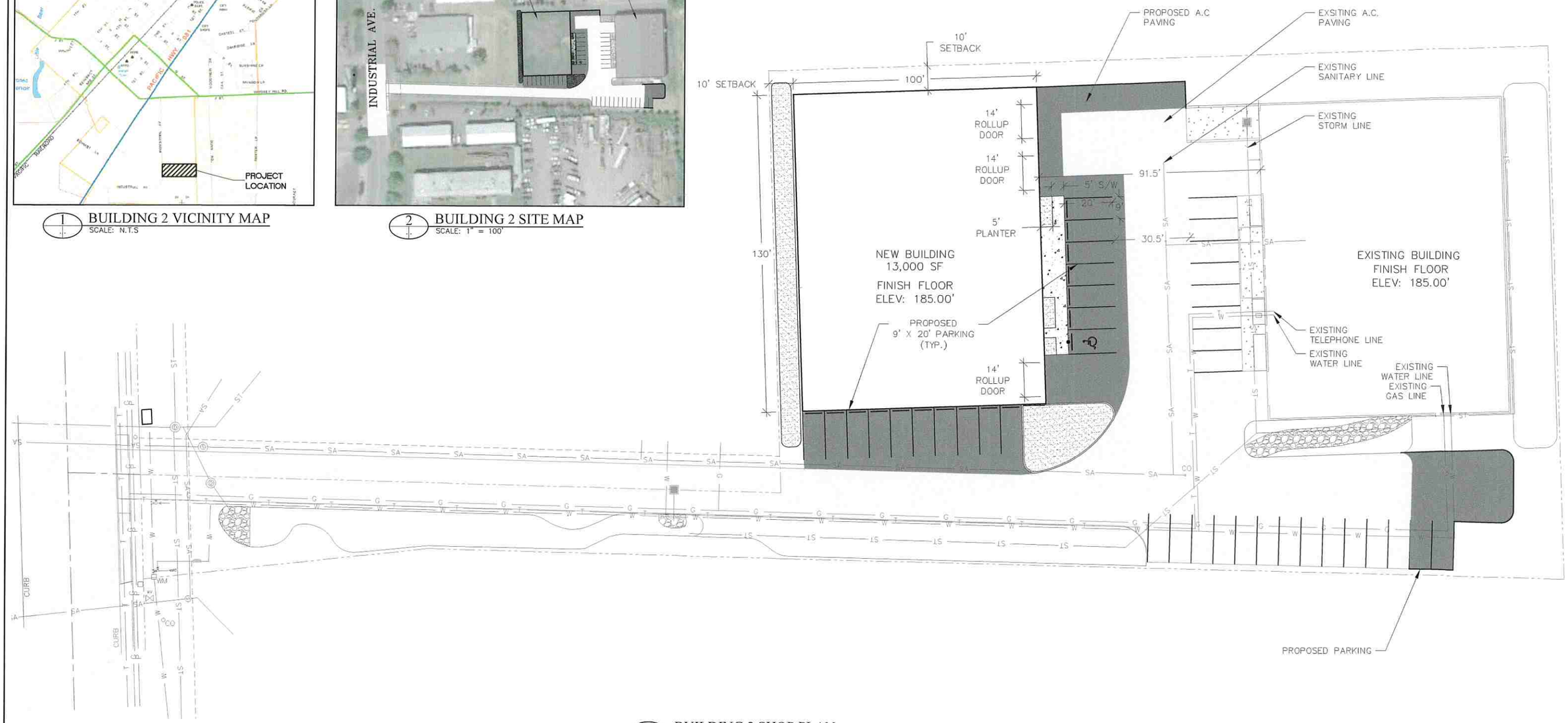

3 BUILDING 2 SHOP PLAN
SCALE: 1" = 20'

BAR IS ONE INCH ON ORIGINAL DRAWING.

ADJUST SCALE AS SHOWN ACCORDINGLY.

REV:#		
REV:#		
REV:#		
REV:#		
REV:#		
REV:#		
REV:#		

REVISIONS

DIGITAL SIGNATURE
REGISTERED PROFESSIONAL ENGINEER
17,529
OREGON
APRIL 29, 1982
CURTIS JAMES McLEOD
EXPIRES: 12/31/2020

CURRAN–McLEOD, INC.
CONSULTING ENGINEERS
6655 S.W. HAMPTON ST., SUITE 210
PORTLAND, OREGON 97223
PHONE (503) 684-3478

HOLLEMAN PROPERTIES
CABINET SHOP CONSTRUCTION

BUILDING 2 CONCEPT PLAN

MARION COUNTY, OREGON

DATE	APRIL 2020
D/N	Holleman
D/R	CJM
D/S	PCB
CAD#	

1 OF 1

J:\Curt\HollemanProperties\WH-CABINETRY SHOP PHASE 2\DWG\WH CABINETRY SHOP PHASE 2 SITE PLAN.dwg, 4/30/2020 3:58:04 PM, DWG To PDF.pc3

MH CUSTOM CABINETRY WORKSHOP & SHOWROOM DEVELOPMENT

CITY OF HUBBARD, MARION COUNTY, OREGON
OCTOBER 2015

CITY OF HUBBARD

RECORD DRAWING
INFORMATION TO CREATE THIS RECORD DRAWING WAS BASED ON INFORMATION OBTAINED FROM THE CONTRACTOR AND/OR ON-SITE OBSERVATIONS.
FEBRUARY 2017

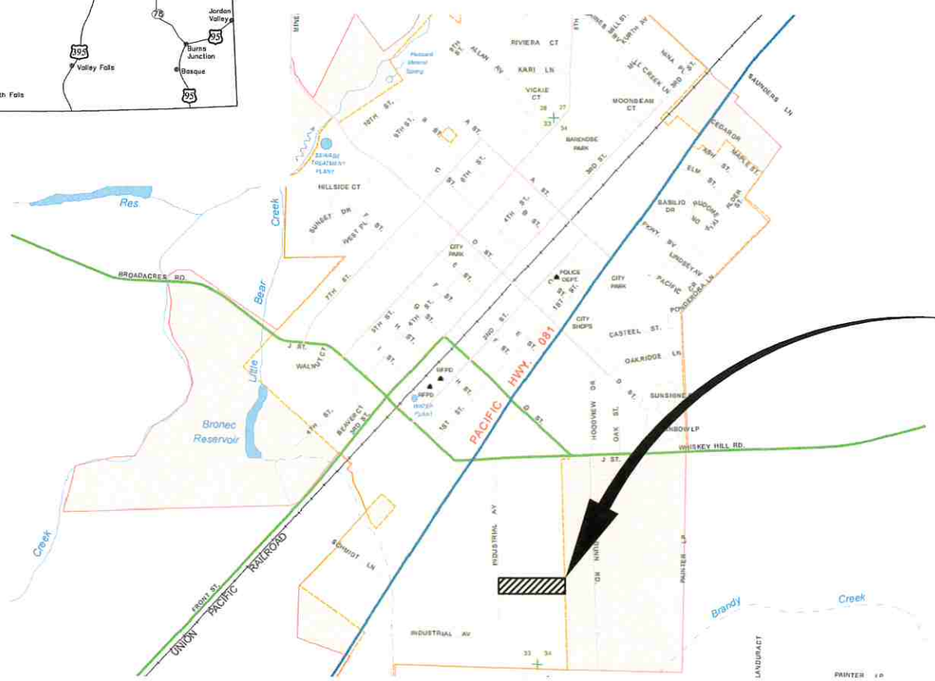

PROJECT SITE

SHEET INDEX

C1	COVER SHEET & INDEX OF DRAWINGS
C2	EROSION CONTROL PLAN - COVER SHEET
C3	EROSION CONTROL PLAN - CLEARING, DEMO, GRADING
C4	EROSION CONTROL PLAN - DETAILS & NOTES
C5	PROJECT AREA MAP
C6	SITE PLAN
C7	UTILITIES PLAN
C8	STORM CONTROL PLAN
C8A	DETENTION POND GRADING
C9	CONSTRUCTION DETAILS
C10	CITY OF HUBBARD STANDARD DETAILS
C11	FLOOR PLAN
L1	LANDSCAPE PLAN

DEVELOPMENT PROPERTY

TAX MAP REFERENCE
T4S, R1W, WM, SEC33DD LOT #303

ADDRESS
2690 INDUSTRIAL AVENUE
HUBBARD, OR 97032

HUBBARD FILE NO.

SDR #2015-04

OWNER

HOLLEMAN PROPERTIES, LLC
26810 S BOLLAND RD
CANBY, OREGON 97013

ENGINEER

CURRAN - McLEOD, INC
CONSULTING ENGINEERS
6655 SW HAMPTON, SUITE 210
PORTLAND OREGON 97223
PHONE: 503-684-3478
FAX: 503-624-8247

TOPOGRAPHY SURVEY HAS BEEN PROVIDED BY ZTEC ENGINEERS SURVEYED MARCH 2015

1 SITE LOCATION
SCALE: N.T.S.

BAR IS ONE INCH ON ORIGINAL DRAWING.
ADJUST SCALE AS SHOWN ACCORDINGLY.

REV	DESCRIPTION	REVISED BY	DATE

REVISIONS

DIGITAL SIGNATURE
REGISTERED PROFESSIONAL ENGINEER 11523 OREGON APR 29 1982 CURTIS J. McLEOD
EXP 12/2016

CURRAN–McLEOD, INC.
CONSULTING ENGINEERS
6655 S.W. HAMPTON ST., SUITE 210
PORTLAND, OREGON 97223
PHONE (503) 684-3478

HOLLEMAN PROPERTIES

COVER SHEET & INDEX OF DRAWINGS

MARION COUNTY, OREGON

DATE	OCT 2015
P/N	GENERAL
D/B	CJM
D/S	PCB
CADd	Holleman

C1 OF C11

\\Curt\Holleman Properties\Hubbard - MH Cabinetry Shop - As-Built Plans\MH Cabinetry Shop Drawing C1-C10-AS-BUILT.dwg, 4/11/2017 3:41:53 PM, PDF Architect 4.pc3

SITE MAP NOT TO SCALE

VICINITY MAP NOT TO SCALE

PROJECT LOCATION:

NEAR HWY 99E & INDUSTRIAL AVE
MARION COUNTY, OREGON
LATITUDE = 45°10'28.97",
LONGITUDE = -122°48'19.66"

PROPERTY DESCRIPTION:

MARION COUNTY TAX MAP 33DD, TL #303
LOCATED IN THE SOUTHEAST 1/4 OF SECTION 33,
TOWNSHIP 4 SOUTH, RANGE 1 WEST,
WILLAMETTE MERIDIAN, MARION COUNTY, OREGON

DEVELOPER

HOLLEMAN PROPERTIES, LLC.
26810 S BOLLAND RD
CANBY, OR 97013
PHONE: 503-263-1330

PLANNING / ENGINEERING / SURVEYING FIRM

CURRAN-McLEOD, INC.
CONTACT: HASSAN IBRAHIM
6655 S.W. HAMPTON, SUITE 210
PORTLAND, OR 97223
PHONE: 503-684-3478
FAX: 503-624-8247

NARRATIVE DESCRIPTIONS

EXISTING SITE CONDITIONS

* OPEN FIELD WITH GRASS AND SOME SHRUBS/TREES

DEVELOPED CONDITIONS

* NEW DRIVEWAY ACCESS, PAVED PARKING LOT, SIDEWALK, UTILITY CONSTRUCTION, PREFABRICATED SHOP BUILDING, STORM DRAINAGE SYSTEM, AND VEGETATION RECONSTRUCTION

NATURE OF CONSTRUCTION ACTIVITY AND ESTIMATED TIME TABLE

* CLEARING/DEMO (AUG. 1 - SEPT. 15)
* UTILITY INSTALLATION (SEPT. 1 - OCT. 15)
* STREET AND FACILITIES CONSTRUCTION (OCT. 15 - JAN. 15)
* FINAL STABILIZATION (JAN. 15 - FEB. 28)

TOTAL SITE AREA = 75,400 SF = 1.731 ACRES

TOTAL DISTURBED AREA = 53,000 SF = 1.217 ACRES

SITE SOIL CLASSIFICATION:

SILT LOAM (AMITY/CONCORD/WOODBURN)

RECEIVING WATER BODIES:

CITY OF HUBBARD MUNICIPAL WATER SYSTEM

PART II: BMPS WITH ESCP IMPLEMENTATION SCHEDULE

PART II: BMPS WITH ESCP IMPLEMENTATION SCHEDULE FORM

The following controls and practices (BMPs), if appropriate for the site, are required in the ESCP.
(See the Notes at the bottom of the page for more information on ESCP revisions.)

YEAR:	2015					2016	
BMPs / MONTH #:	8	9	10	11	12	1	2
Pipe Slope Drains							
Energy Dissipaters							
Temporary Diversion Dikes							
Check Dams							
Temporary Seeding and Planting							
Permanent Seeding and Planting							X
Mycorrhizae/ Biofertilizers							
Mulches (Specify Type)							
Construction Entrance	X	X	X	X	X	X	X
Compost Blankets							
Compost Socks							
Compost Berm							
Soil Tackifiers							
Sodding Vegetative Buffer Strips							
Plastic Sheeting							
Sediment Fencing	X	X	X	X	X	X	X
Erosion Control Blankets & Mats (Specify type)							
Earth Dikes (Stabilized)							
Drainage Swales							
Rock Outlet Protection							
Sediment Trap							
Straw Wattles (Loose compaction rice straw)							
Storm Drain Inlet Protection	X	X	X	X	X	X	X
Temporary or Permanent Sedimentation Basins							
Unpaved roads graveled or other BMP on the road							
Dewatering (treatment location, schematic, & sampling plan required)							
Paving Operations Controls						X	
Concrete Truck Washout				X	X	X	X

Submission of all ESCP revisions to DEQ is not required. ESCP revisions must be submitted only if they are made for any of the following reasons:
(1) Part of a Corrective Action.
(2) Change (increase or decrease) in the size of the project.
(3) Change (increase or decrease) in the size or location of disturbed areas.
(4) Change to BMPs (for example, type, design or location).
(5) Change in erosion and sediment control inspector.

INSPECTION FREQUENCY TABLE & STANDARD EROSION AND SEDIMENT CONTROL PLAN NOTES

SITE CONDITIONS	MINIMUM FREQUENCY
1. Active period	Daily when stormwater runoff, including runoff from snowmelt, is occurring, at least once every two weeks, regardless of whether or not runoff is occurring.
2. Prior to the site becoming inactive or in anticipation of site inaccessibility.	Once to ensure that erosion and sediment control measures are in working order. any necessary maintenance and repair must be made prior to leaving the site
3. Inactive periods greater than fourteen (14) calendar days.	Once every two (2) weeks.
4. Periods during which the site is inaccessible due to inclement weather.	If practical, inspections must occur daily at a relevant and accessible discharge point or downstream location.

1. HOLD A PRE-CONSTRUCTION MEETING OF PROJECT CONSTRUCTION PERSONNEL THAT INCLUDES THE INSPECTOR TO DISCUSS EROSION AND SEDIMENT CONTROL MEASURES AND CONSTRUCTION LIMITS. (Schedule A.8.e.i.(3))
2. ALL INSPECTIONS MUST BE MADE IN ACCORDANCE WITH DEQ 1200-C PERMIT REQUIREMENTS.
3. INSPECTION LOGS MUST BE KEPT IN ACCORDANCE WITH DEQ'S 1200-C PERMIT REQUIREMENTS.
4. RETAIN A COPY OF THE ESCP AND ALL REVISIONS ON SITE AND MAKE IT AVAILABLE ON REQUEST TO DEQ, AGENT, OR THE LOCAL MUNICIPALITY DURING INACTIVE PERIODS OF GREATER THAN SEVEN (7) CONSECUTIVE CALENDAR DAYS, RETAIN THE ESCP AT THE CONSTRUCTION SITE OR AT ANOTHER LOCATION. (Schedule B.2.a)
5. ALL PERMIT REGISTRANTS MUST IMPLEMENT THE ESCP. FAILURE TO IMPLEMENT ANY OF THE CONTROL MEASURES OR PRACTICES DESCRIBED IN THE ESCP IS A VIOLATION OF THE PERMIT. (Schedule A 8.a)
6. THE ESCP MEASURES SHOWN ON THIS PLAN ARE MINIMUM REQUIREMENTS FOR ANTICIPATED SITE CONDITIONS. DURING THE CONSTRUCTION PERIOD, UPGRADE THESE MEASURES AS NEEDED TO COMPLY WITH ALL APPLICABLE LOCAL, STATE, AND FEDERAL EROSION AND SEDIMENT CONTROL REGULATIONS. (Schedule A.8.e.ii.(1)(c))
7. SUBMISSION OF ALL ESCP REVISIONS IS NOT REQUIRED. SUBMITTAL OF THE ESCP REVISIONS IS ONLY UNDER SPECIFIC CONDITIONS. SUBMIT ALL NECESSARY REVISION TO DEQ OR AGENT. (Schedule A.12.c.iii)
8. PHASE CLEARING AND GRADING TO THE MAXIMUM EXTENT PRACTICAL TO PREVENT EXPOSED INACTIVE AREAS FROM BECOMING A SOURCE OF EROSION. (Schedule A.8.c.ii.(1)(d))
9. IDENTIFY, MARK, AND PROTECT (BY FENCING OFF OR OTHER MEANS) CRITICAL RIPARIAN AREAS AND VEGETATION INCLUDING IMPORTANT TREES AND ASSOCIATED ROOTING ZONES, AND VEGETATION AREAS TO BE PRESERVED. IDENTIFY VEGETATIVE BUFFER ZONES BETWEEN THE SITE AND SENSITIVE AREAS (E.G., WETLANDS), AND OTHER AREAS TO BE PRESERVED, ESPECIALLY IN PERIMETER AREAS. (Schedule A.8.c.i.(1) & (2))
10. PRESERVE EXISTING VEGETATION WHEN PRACTICAL AND RE-VEGETATE OPEN AREAS. RE-VEGETATE OPEN AREAS WHEN PRACTICABLE BEFORE AND AFTER GRADING OR CONSTRUCTION. IDENTIFY THE TYPE OF VEGETATIVE SEED MIX USED. (Schedule A.7.b.iii(1) and A.7.b.iii(3))
11. EROSION AND SEDIMENT CONTROL MEASURES INCLUDING PERIMETER SEDIMENT CONTROL MUST BE IN PLACE BEFORE VEGETATION IS DISTURBED AND MUST REMAIN IN PLACE AND BE MAINTAINED, REPAIRED, AND PROMPTLY IMPLEMENTED FOLLOWING PROCEDURES ESTABLISHED FOR THE DURATION OF CONSTRUCTION, INCLUDING PROTECTION FOR ACTIVE STORM DRAIN INLETS AND CATCH BASINS AND APPROPRIATE NON-STORMWATER POLLUTION CONTROLS. (Schedule A.7.d.i and A.8.c)
12. ESTABLISH CONCRETE TRUCK AND OTHER CONCRETE EQUIPMENT WASHOUT AREAS BEFORE BEGINNING CONCRETE WORK. (Schedule A.8.c.i.(6))
13. APPLY TEMPORARY AND/OR PERMANENT SOIL STABILIZATION MEASURES IMMEDIATELY ON ALL DISTURBED AREAS AS GRADING PROGRESSES AND FOR ALL ROADWAYS INCLUDING GRAVEL ROADWAYS. (Schedule A.8.e.ii.(2))
14. ESTABLISH MATERIAL AND WASTE STORAGE AREAS. AND OTHER NON-STORMWATER CONTROLS. (Schedule A.8.c.i.(7))
15. PREVENT TRACKING OF SEDIMENT ONTO PUBLIC OR PRIVATE ROADS USING BMPS SUCH AS: GRAVELED (OR PAVED) EXITS AND PARKING AREAS. GRAVEL ALL UNPAVED ROADS LOCATED ONSITE, OR USE AN EXIT TIRE WASH. THESE BMPS MUST BE IN PLACE PRIOR TO LAND-DISTURBING ACTIVITIES. (Schedule A.7.d.ii (1) and A.8.c.i(4))
16. WHEN TRUCKING SATURATED SOILS FROM THE SITE, EITHER USE WATER-TIGHT TRUCKS OR DRAIN LOADS ON SITE. (Schedule A.7.d.ii.(3))
17. USE BMPS TO PREVENT OR MINIMIZE STORMWATER EXPOSURE TO POLLUTANTS FROM SPILLS, VEHICLE AND EQUIPMENT FUELING, MAINTENANCE, AND STORAGE, OTHER CLEANING AND MAINTENANCE ACTIVITIES, AND WASTE HANDLING ACTIVITIES. THESE POLLUTANTS INCLUDE FUEL, HYDRAULIC FLUID, AND OTHER OILS FROM VEHICLES AND MACHINERY, AS WELL AS DEBRIS, LEFTOVER PAINTS, SOLVENTS, AND GLUES FROM CONSTRUCTION OPERATIONS. (Schedule A.7.e.i.(2))
18. IMPLEMENT THE FOLLOWING BMPS WHEN APPLICABLE: WRITTEN SPILL PREVENTION AND RESPONSE PROCEDURES, EMPLOYEE TRAINING ON SPILL PREVENTION AND PROPER DISPOSAL PROCEDURES. SPILL KITS IN ALL VEHICLES, REGULAR MAINTENANCE SCHEDULE FOR VEHICLES AND MACHINERY, MATERIAL DELIVERY AND STORAGE CONTROLS, TRAINING AND SIGNAGE, AND COVERED STORAGE AREAS FOR WASTE AND SUPPLIES. (Sch A.7.e.iii.)
19. USE WATER, SOIL-BINDING AGENT OR OTHER DUST CONTROL TECHNIQUE AS NEEDED TO AVOID WIND-BLOWN SOIL. (Schedule A.7.b.ii)
20. THE APPLICATION RATE OF FERTILIZERS USED TO REESTABLISH VEGETATION MUST FOLLOW MANUFACTURER'S RECOMMENDATIONS TO MINIMIZE NUTRIENT RELEASES TO SURFACE WATERS. EXERCISE CAUTION WHEN USING TIME-RELEASE FERTILIZERS WITHIN ANY WATERWAY RIPARIAN ZONE. (Schedule A.9.b.iii)
21. IF A STORMWATER TREATMENT SYSTEM (FOR EXAMPLE. ELECTRO-COAGULATION, FLOCCULATION, FILTRATION, ETC.) FOR SEDIMENT OR OTHER POLLUTANT REMOVAL IS EMPLOYED, SUBMIT AN OPERATION AND MAINTENANCE PLAN (INCLUDING SYSTEM SCHEMATIC, LOCATION OF SYSTEM, LOCATION OF INLET, LOCATION OF DISCHARGE, DISCHARGE DISPERSION DEVICE DESIGN, AND A SAMPLING PLAN AND FREQUENCY) BEFORE OPERATING THE TREATMENT SYSTEM. OBTAIN PLAN APPROVAL BEFORE OPERATING THE TREATMENT SYSTEM. OPERATE AND MAINTAIN THE TREATMENT SYSTEM ACCORDING TO MANUFACTURER'S SPECIFICATIONS. (Schedule A.9.d)
22. TEMPORARILY STABILIZE SOILS AT THE END OF THE SHIFT BEFORE HOLIDAYS AND WEEKENDS, IF NEEDED. THE REGISTRANT IS RESPONSIBLE FOR ENSURING THAT SOILS ARE STABLE DURING RAIN EVENTS AT ALL TIMES OF THE YEAR. (Schedule A.7.b)
23. AT THE END OF EACH WORKDAY SOIL STOCKPILES MUST BE STABILIZED OR COVERED, OR OTHER BMPS MUST BE IMPLEMENTED TO PREVENT DISCHARGES TO SURFACE WATERS OR CONVEYANCE SYSTEMS LEADING TO SURFACE WATERS. (Schedule A.7.e.ii.(2))
24. CONSTRUCTION ACTIVITIES MUST AVOID OR MINIMIZE EXCAVATION AND CREATION OF BARE GROUND DURING WET WEATHER. (Schedule A.7.a.i)
25. SEDIMENT FENCE: REMOVE TRAPPED SEDIMENT BEFORE IT REACHES ONE THIRD OF THE ABOVE GROUND FENCE HEIGHT AND BEFORE FENCE REMOVAL. (Schedule A.9.c.i)
26. OTHER SEDIMENT BARRIERS (SUCH AS BIOBAGS): REMOVE SEDIMENT BEFORE IT REACHES TWO INCHES DEPTH ABOVE GROUND HEIGHT. AND BEFORE BMP REMOVAL. (Schedule A.9.c.ii)
27. CATCH BASINS: CLEAN BEFORE RETENTION CAPACITY HAS BEEN REDUCED BY FIFTY PERCENT. SEDIMENT BASINS AND SEDIMENT TRAPS: REMOVE TRAPPED SEDIMENTS BEFORE DESIGN CAPACITY HAS BEEN REDUCED BY FIFTY PERCENT AND AT COMPLETION OF PROJECT. (Schedule A.9.e.iii & iv)
28. WITHIN 24 HOURS, SIGNIFICANT SEDIMENT THAT HAS LEFT THE CONSTRUCTION SITE, MUST BE REMEDIATED. INVESTIGATE THE CAUSE OF THE SEDIMENT RELEASE AND IMPLEMENT STEPS TO PREVENT A RECURRENCE OF THE DISCHARGE WITHIN THE SAME 24 HOURS. ANY IN-STREAM CLEAN UP OF SEDIMENT SHALL BE PERFORMED ACCORDING TO THE OREGON DIVISION OF STATE LANDS REQUIRED TIMEFRAME. (Schedule A.9.b.i)
29. THE INTENTIONAL WASHING OF SEDIMENT INTO STORM SEWERS OR DRAINAGE WAYS MUST NOT OCCUR. VACUUMING OR DRY SWEEPING AND MATERIAL PICKUP MUST BE USED TO CLEANUP RELEASED SEDIMENTS. (Schedule A.9.b.ii)
30. THE ENTIRE SITE MUST BE TEMPORARILY STABILIZED USING VEGETATION OR A HEAVY MULCH LAYER, TEMPORARY SEEDING, OR OTHER METHOD SHOULD ALL CONSTRUCTION ACTIVITIES CEASE FOR 30 DAYS OR MORE. (Schedule A.7.f.i)
31. PROVIDE TEMPORARY STABILIZATION FOR THAT PORTION OF THE SITE WHERE CONSTRUCTION ACTIVITIES CEASE FOR 14 DAYS OR MORE WITH A COVERING OF BLOWN STRAW AND A TACKIFIER, LOOSE STRAW, OR AN ADEQUATE COVERING OF COMPOST MULCH UNTIL WORK RESUMES ON THAT PORTION OF THE SITE. (Schedule A.7.f.ii)
32. PROVIDE PERMANENT EROSION CONTROL MEASURES ON ALL EXPOSED AREAS. DO NOT REMOVE TEMPORARY SEDIMENT CONTROL PRACTICES UNTIL PERMANENT VEGETATION OR OTHER COVER OF EXPOSED AREAS IS ESTABLISHED. HOWEVER, DO REMOVE ALL TEMPORARY EROSION CONTROL MEASURES AS EXPOSED AREAS BECOME STABILIZED, UNLESS DOING SO CONFLICTS WITH LOCAL REQUIREMENTS. PROPERLY DISPOSE OF CONSTRUCTION MATERIALS AND WASTE, INCLUDING SEDIMENT RETAINED BY TEMPORARY BMPS. (Schedule A.7.b.iii(2) and A.8.c.iii)

PERMITTEE'S SITE INSPECTOR:

HASSAN IBRAHIM

COMPANY/AGENCY: CURRAN- McLEOD, INC.
PHONE: 503-684-3478
FAX: 503-624-8247
E-MAIL: hai@curran-mcleod.com

DESCRIPTION OF EXPERIENCE:
27 YEARS OF EXPERIENCE IN THE CONSTRUCTION INDUSTRY, ATTENDED 12 HOUR TRAINING COURSE ON OREGON EROSION CONTROL CONFERENCE, 8 HOUR TRAINING COURSE ON URBAN WATERSHED INSTITUTE, ENGINEERING EFFECTIVE WQ FACILITIES, 6 HOUR TRAINING COURSE ON SOIL BIO ENGINEERING I ASSESSING STREAM AND UPLAND EROSION, 4 HOUR TRAINING COURSE ON EROSION CONTROL AND RETAINING WALL SHORT COURSE.

INSPECTION FREQUENCY:

* ONCE EVERY TWO WEEKS ON INACTIVE SITES
* DAILY WHEN STORMWATER RUNOFF IS OCCURRING

HOLD A PRE-CONSTRUCTION MEETING OF PROJECT CONSTRUCTION PERSONNEL THAT INCLUDES THE EROSION CONTROL INSPECTOR.

ATTENTION EXCAVATORS:

OREGON LAW REQUIRES YOU TO FOLLOW RULES ADOPTED BY THE OREGON UTILITY NOTIFICATION CENTER. THOSE RULES ARE SET FORTH IN OAR 952-001-0010 THROUGH OAR 952-001-0090. YOU MAY OBTAIN COPIES OF THESE RULES FROM THE CENTER BY CALLING 503-232-1987. IF YOU HAVE ANY QUESTIONS ABOUT THE RULES, YOU MAY CONTACT THE CENTER. YOU MUST NOTIFY THE CENTER AT LEAST TWO BUSINESS DAYS, BEFORE COMMENCING AN EXCAVATION. CALL 503-246-6699.

LOCAL AGENCY-SPECIFIC EROSION CONTROL NOTES:

1. OWNER OR DESIGNATED PERSON SHALL BE RESPONSIBLE FOR PROPER INSTALLATION AND MAINTENANCE OF ALL EROSION AND SEDIMENT CONTROL MEASURES, IN ACCORDANCE WITH LOCAL, STATE, AND FEDERAL REGULATIONS.
2. PRIOR TO ANY LAND DISTURBING ACTIVITIES, THE BOUNDARIES OF THE CLEARING LIMITS, VEGETATED BUFFERS, AND ANY SENSITIVE AREAS SHOWN ON THIS PLAN SHALL BE CLEARLY DELINEATED IN THE FIELD. DURING THE CONSTRUCTION PERIOD, NO DISTURBANCE IS PERMITTED BEYOND THE CLEARING LIMITS. THE OWNER/PERMITTEE MUST MAINTAIN THE DELINEATION FOR THE DURATION OF THE PROJECT. NOTE: VEGETATED CORRIDORS TO BE DELINEATED WITH ORANGE CONSTRUCTION FENCE OR APPROVED EQUAL.
3. PRIOR TO ANY LAND DISTURBING ACTIVITIES, THE BMP's THAT MUST BE INSTALLED ARE A GRAVEL CONSTRUCTION ENTRANCE, PERIMETER SEDIMENT CONTROL, AND INLET PROTECTION. THESE BMP's MUST BE MAINTAINED FOR THE DURATION OF THE PROJECT.
4. IF VEGETATIVE SEED MIXES ARE SPECIFIED, SEEDING MUST TAKE PLACE NO LATER THAT SEPTEMBER 1; THE TYPE AND PERCENTAGES OF SEED IN THE MIX MUST BE IDENTIFIED ON THE PLANS.
5. ALL PUMPING OF SEDIMENT LADEN WATER SHALL BE DISCHARGED OVER AN UNDISTURBED, PREFERABLY VEGETATED AREA, AND THROUGH A SEDIMENT CONTROL BMP i.e. (FILTER BAG).
6. THE ESC PLAN MUST BE KEPT ON SITE. ALL MEASURES SHOWN ON THE PLAN MUST BE INSTALLED PROPERLY TO ENSURE THAT SEDIMENT OR SEDIMENT LADEN WATER DOES NOT ENTER A SURFACE WATER SYSTEM, ROADWAY, OR OTHER PROPERTIES.
7. THE ESC MEASURES SHOWN ON THIS PLAN ARE MINIMUM REQUIREMENTS FOR ANTICIPATED SITE CONDITIONS. DURING THE CONSTRUCTION PERIOD, THESE MEASURES SHALL BE UPGRADED AS NEEDED TO COMPLY WITH ALL APPLICABLE LOCAL, STATE, AND FEDERAL EROSION CONTROL REGULATIONS. CHANGES TO THE APPROVED ESC PLAN MUST BE SUBMITTED IN THE FORM OF AN ACTION PLAN TO DEQ PER THE 1200 C PERMIT.
8. IN AREAS SUBJECT TO WIND EROSION, APPROPRIATE BMP's MUST BE USED WHICH MAY INCLUDE THE APPLICATION OF FINE WATER SPRAYING, PLASTIC SHEETING, MULCHING, OR OTHER APPROVED MEASURES.
9. ALL EXPOSED SOILS MUST BE COVERED DURING THE WET WEATHER PERIOD.

SHEET INDEX

EROSION AND SEDIMENT CONTROL PLANS

C2 COVER SHEET
C3 CLEARING, DEMOLITION, STREET, AND UTILITY CONSTRUCTION EROSION AND SEDIMENT CONTROL
C4 EROSION AND SEDIMENT CONTROL DETAILS & NOTES

RECORD DRAWING
INFORMATION TO CREATE THIS RECORD DRAWING WAS BASED ON INFORMATION OBTAINED FROM THE CONTRACTOR AND/OR ON-SITE OBSERVATIONS.
FEBRUARY 2017

BAR IS ONE INCH ON ORIGINAL DRAWING.
ADJUST SCALE AS SHOWN ACCORDINGLY.

REV.	DESCRIPTION	REVISED BY	DATE

REVISIONS

DIGITAL SIGNATURE
REGISTERED PROFESSIONAL ENGINEER 11529 OREGON APR 29, 1982 CURTIS J. McLEOD
EXP 12/2016

CURRAN-McLEOD, INC.
CONSULTING ENGINEERS
6655 S.W. HAMPTON ST., SUITE 210
PORTLAND, OREGON 97223
PHONE (503) 684-3478

HOLLEMAN PROPERTIES
CABINET SHOP CONSTRUCTION

EROSION CONTROL PLAN
COVER SHEET

MARION COUNTY, OREGON

DATE	OCT 2015
D/N	GENERAL
D/R	CJM
R/S	PCB
CADM	

C2 OF C11

\\Curt\Holleman Properties\Hubbard - HH Cabinetry Shop - As-Built Plans\HH Cabinetry Shop Drawing C1-C10-AS-BUILT.dwg, 4/11/2017 3:43:56 PM, PDF Architect 3.pc3

LEGEND

- EXISTING SIGN
- EXISTING UTILITY POLE
- EXISTING MAIL BOX
- EXISTING WATER METER
- EXISTING FIRE HYDRANT
- NEW G-2 TYPE C.B.
- FLOW LINE DIRECTIONAL ARROW
- TREES TO BE REMOVED
- SEDIMENT CONTROL FENCING (SEE SHEET C4)

NOTES:

SEE SHEET C2 FOR EROSION & SEDIMENT CONSTRUCTION AND BMP IMPLEMENTATION NOTES

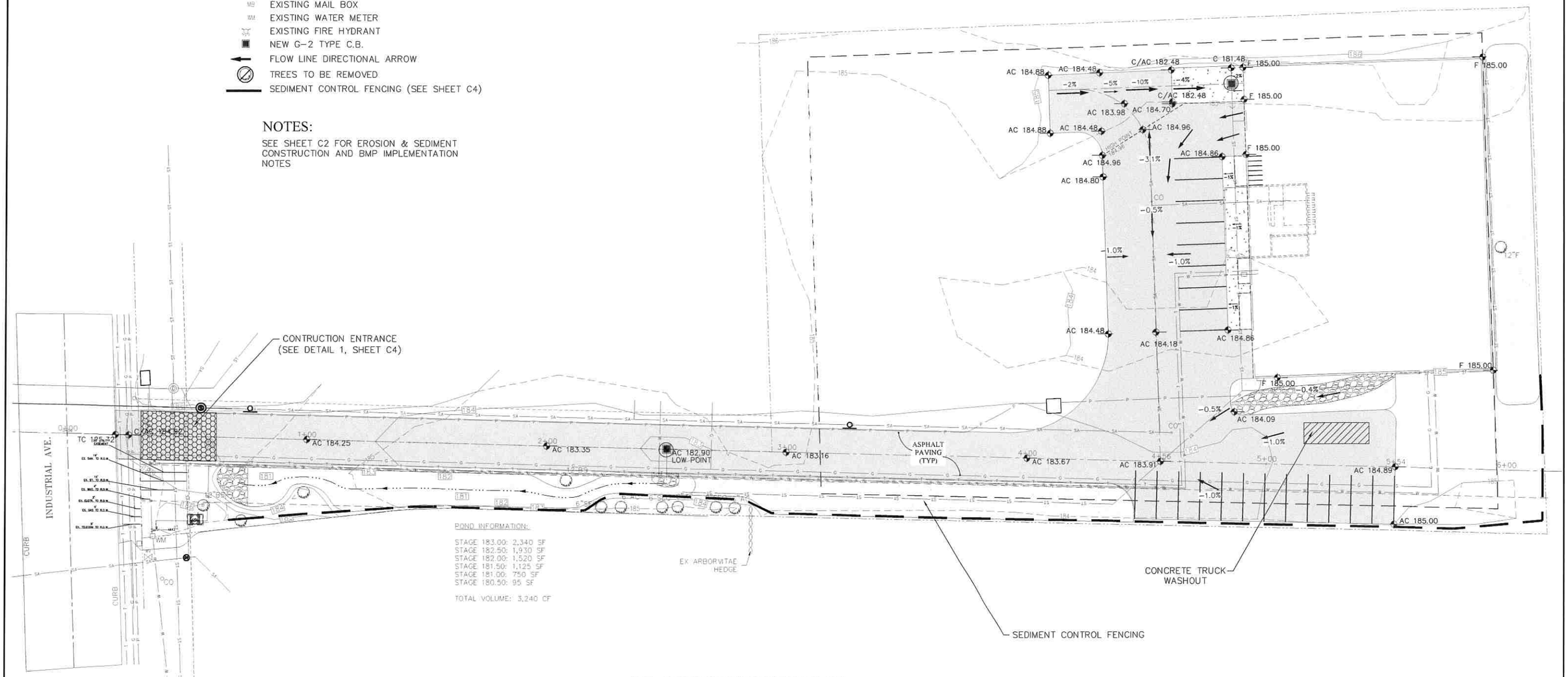

NEW CABINET SHOP PLAN

SCALE: 1" = 20'

RECORD DRAWING

INFORMATION TO CREATE THIS RECORD DRAWING WAS BASED ON INFORMATION OBTAINED FROM THE CONTRACTOR AND/OR ON-SITE OBSERVATIONS.

FEBRUARY 2017

BAR IS ONE INCH ON ORIGINAL DRAWING.

ADJUST SCALE AS SHOWN ACCORDINGLY.

REV.	DESCRIPTION	REVISED BY	DATE

REVISIONS

DIGITAL SIGNATURE

REGISTERED PROFESSIONAL ENGINEER 11529 OREGON APR 29, 1993 CURTIS J. McLEOD

EXP 12/2016

CURRAN-McLEOD, INC.
CONSULTING ENGINEERS
6655 S.W. HAMPTON ST., SUITE 210
PORTLAND, OREGON 97223
PHONE (503) 684-3478

HOLLEMAN PROPERTIES
CABINET SHOP CONSTRUCTION

EROSION CONTROL PLAN CLEARING, DEMO, GRADING, & STREET/UTILITY CONSTRUCTION

MARION COUNTY, OREGON

DATE	OCT 2015
P/N	GENERAL
D/R	CJM
D/S	PCB
CAD#	

C3 OF C11

\Curt\Holleman Properties\Hubbard - MH Cabinetry Shop - As-Built Plans\MH Cabinetry Shop Drawing C1-C10-AS-BUILT.dwg, 4/11/2017 3:44:02 PM, PDF Architect 4.pc3

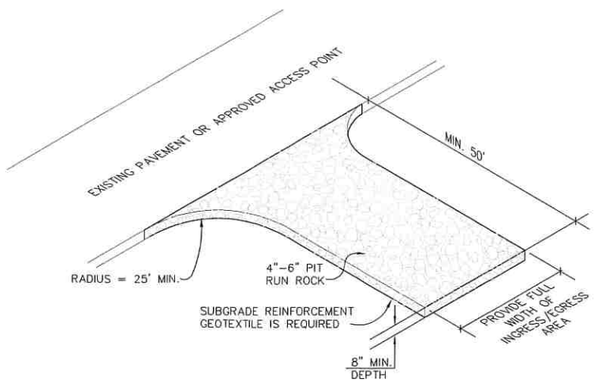

1 TYPICAL CONSTRUCTION ENTRANCE
N.T.S.

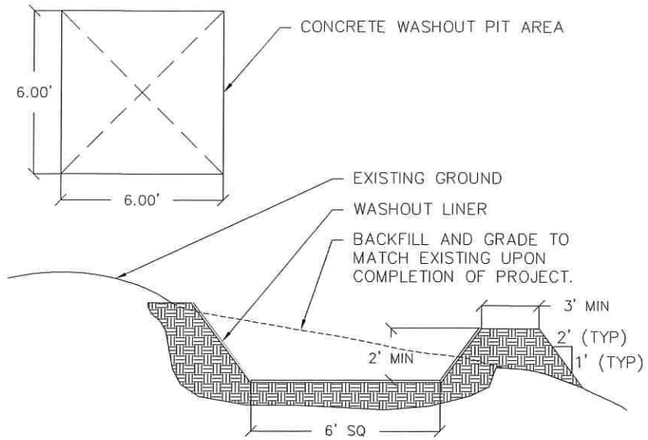

NOTES:
1. WASHOUT AREA TO CONTAIN A MINIMUM OF 3 CY.
2. REMOVE AND LEGALLY DISPOSE OF WASTE MATERIAL WHEN IT ACCUMULATES TO ⅔ OF WET STORAGE CAPACITY OF PIT.
3. CONCRETE WASHOUT AREA TO BE REPAIRED AND/OR ENLARGED AS NECESSARY TO MAINTAIN CAPACITY FOR CONCRETE.
4. UPON COMPLETION OF CONSTRUCTION ACTIVITIES REQUIRING CONCRETE WASHOUT, THE WASHOUT SHALL BE REMOVED AND THE AREA RESTORED TO FINISH GRADE AND EXISTING CONDITIONS.

3 CONCRETE WASHOUT AREA
N.T.S.

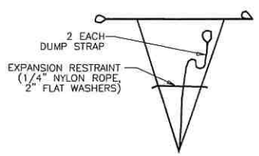

BAG DETAIL

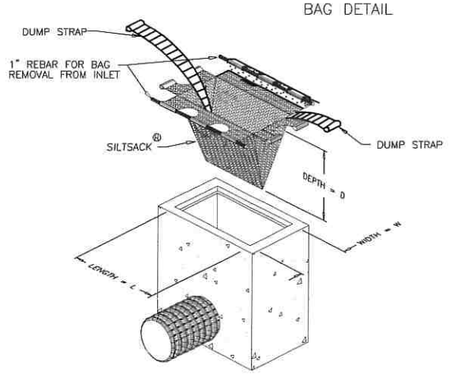

Regular Flow Only
Do not use High Flow Insert Bags.

2 CATCH BASIN INSERT BAG
N.T.S.

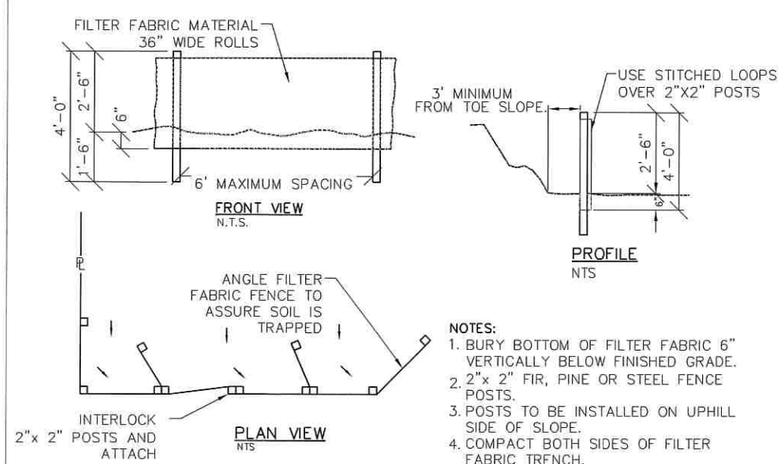

NOTES:
1. BURY BOTTOM OF FILTER FABRIC 6" VERTICALLY BELOW FINISHED GRADE.
2. 2"x 2" FIR, PINE OR STEEL FENCE POSTS.
3. POSTS TO BE INSTALLED ON UPHILL SIDE OF SLOPE.
4. COMPACT BOTH SIDES OF FILTER FABRIC TRENCH.

4 SEDIMENT FENCE DETAIL
N.T.S.

GRADING, STREET & UTILITY NOTES AND EROSION & SEDIMENT CONSTRUCTION

1. ACTIVE INLETS TO STORM WATER SYSTEMS SHALL BE PROTECTED THROUGH THE USE OF APPROVED INLET PROTECTION MEASURES. ALL INLET PROTECTION MEASURES ARE TO BE REGULARLY INSPECTED AND MAINTAINED AS NEEDED.
2. SATURATED MATERIALS THAT ARE HAULED OFF-SITE MUST BE TRANSPORTED IN WATER-TIGHT TRUCKS TO ELIMINATE SPILLAGE OF SEDIMENT AND SEDIMENT-LADEN WATER.
3. AN AREA SHALL BE PROVIDED FOR THE WASHING OUT OF CONCRETE TRUCKS IN A LOCATION THAT DOES NOT PROVIDE RUN-OFF THAT CAN ENTER THE STORM WATER SYSTEM. IF THE CONCRETE WASH-OUT AREA CAN NOT BE CONSTRUCTED GREATER THAN 50' FROM ANY DISCHARGE POINT, SECONDARY MEASURES SUCH AS BERMS OR TEMPORARY SETTLING PITS MAY BE REQUIRED. THE WASH-OUT SHALL BE LOCATED WITHIN SIX FEET OF TRUCK ACCESS AND BE CLEANED WHEN IT REACHES 50% OF THE CAPACITY.
4. SWEEPINGS FROM EXPOSED AGGREGATE CONCRETE SHALL NOT BE TRANSFERRED TO THE STORM WATER SYSTEM. SWEEPINGS SHALL BE PICKED UP AND DISPOSED IN THE TRASH.
5. AVOID PAVING IN WET WEATHER WHEN PAVING CHEMICALS CAN RUN-OFF INTO THE STORM WATER SYSTEM.
6. USE BMPs SUCH AS CHECK-DAMS, BERMS, AND INLET PROTECTION TO PREVENT RUN-OFF FROM REACHING DISCHARGE POINTS.
7. COVER CATCH BASINS, MANHOLES, AND OTHER DISCHARGE POINTS WHEN APPLYING SEAL COAT, TACK COAT, ETC. TO PREVENT INTRODUCING THESE MATERIALS TO THE STORM WATER SYSTEM.

EROSION & SEDIMENT CONTROL BMP IMPLEMENTATION:

1. ALL BASE ESC MEASURES (INLET PROTECTION, PERIMETER SEDIMENT CONTROL, GRAVEL CONSTRUCTION ENTRANCES, ETC.) MUST BE IN PLACE, FUNCTIONAL, AND APPROVED IN AN INITIAL INSPECTION, PRIOR TO COMMENCEMENT OF CONSTRUCTION ACTIVITIES.
2. THE "STAGING, EQUIPMENT MAINTENANCE, FUELING, PORTA-POTTY, AND SOLID WASTE AREA 1" SHALL BE MOVED TO "STAGING, EQUIPMENT MAINTENANCE, FUELING, PORTA-POTTY, AND SOLID WASTE AREA 2" FOLLOWING EXCAVATION "CUT" ACTIVITIES.
3. ALL "SEDIMENT BARRIERS (TO BE INSTALLED AFTER GRADING)" SHALL BE INSTALLED IMMEDIATELY FOLLOWING ESTABLISHMENT OF FINISHED GRADE.
4. INLET PROTECTION SHALL BE IN-PLACE IMMEDIATELY FOLLOWING PAVING ACTIVITIES.

NOTE:

EXISTING AND PROPOSED DRAINAGE CONTINUES TO FLOW NORTH AND SOUTH INTO EXISTING STORM DRAIN SYSTEM

THESE EROSION AND SEDIMENT CONTROL PLANS ASSUME "WET WEATHER" CONSTRUCTION MEASURES NEED TO BE APPLIED BETWEEN OCTOBER 1ST AND MAY 31ST.

RECORD DRAWING
INFORMATION TO CREATE THIS RECORD DRAWING WAS BASED ON INFORMATION OBTAINED FROM THE CONTRACTOR AND/OR ON-SITE OBSERVATIONS.
FEBRUARY 2017

PRE-CONSTRUCTION, CLEARING & DEMOLITION NOTES:

1. ALL BASE ESC MEASURES (INLET PROTECTION, PERIMETER SEDIMENT CONTROL, GRAVEL CONSTRUCTION ENTRANCES, ETC) MUST BE IN PLACE, FUNCTIONAL, AND APPROVED IN AN INITIAL INSPECTION, PRIOR TO COMMENCEMENT OF CONSTRUCTION ACTIVITIES.
2. SEDIMENT BARRIERS APPROVED FOR USE INCLUDE SEDIMENT FENCE, STRAW WATTLES,OR OTHER APPROVED MATERIALS.
3. SENSITIVE RESOURCES INCLUDING, BUT NOT LIMITED TO, TREES, WETLANDS, AND RIPARIAN PROTECTION AREAS SHALL BE CLEARLY DELINEATED WITH ORANGE CONSTRUCTION FENCING OF CHAIN LINK FENCING IN A MANNER THAT IS CLEARLY VISIBLE TO ANYONE IN THE AREA. NO ACTIVITIES ARE PERMITTED TO OCCUR BEYOND THE CONSTRUCTION BARRIER.
4. CONSTRUCTION ENTRANCES SHALL BE INSTALLED AT THE BEGINNING OF CONSTRUCTION AND MAINTAINED FOR THE DURATION OF THE PROJECT. ADDITIONAL MEASURES INCLUDING, BUT NOT LIMITED TO, STREET SWEEPING, AND VACUUMING MAY BE REQUIRED TO INSURE THAT ALL PAVED AREAS ARE KEPT CLEAN FOR THE DURATION OF THE PROJECT.
5. RUN-ON AND RUN-OFF CONTROLS SHALL BE IN PLACE AND FUNCTIONING PRIOR TO BEGINNING SUBSTANTIAL CONSTRUCTION ACTIVITIES.

OTHER MISCELLANEOUS BMP NOTES:

TO PREVENT ILLICIT CONNECTION AND ILLEGAL DISCHARGE:

1. INSPECTION SITE BEFORE BEGINNING THE JOB FOR EVIDENCE OF ILLICIT CONNECTIONS OR ILLEGAL DUMPING OR DISCHARGES.
2. INSPECT SITE REGULARLY DURING PROJECT EXECUTION FOR EVIDENCE OF ILLICIT CONNECTION OR ILLEGAL DUMPING OR DISCHARGES.
3. OBSERVE SITE PERIMETER FOR EVIDENCE OR POTENTIAL OF ILLICITLY DISCHARGED OR ILLEGALLY DUMPED MATERIAL WHICH MAY ENTER THE JOB SITE.
4. IDENTIFICATION OF ILLICIT CONNECTIONS AND ILLEGAL DUMPING OR DISCHARGES:

A. SOLIDS:
LOOK FOR DEBRIS, OR RUBBISH PILES. SOLID WASTE DUMPING OFTEN OCCURS ON ROADWAY WITH LIGHT TRAFFIC LOADS OR IN AREAS NOT EASILY VISIBLE FROM THE TRAVELED WAY.

B. LIQUIDS:
1. VISIBLE SIGNS OF STAINING OR UNUSUAL COLORS TO THE PAVEMENT OR SURROUNDING ADJACENT SOILS.
2. DISCOLORATION OR ONLY SUBSTANCES IN THE WATER OR STAINS AND RESIDUES DETAINED WITH DITCHES, CHANNELS OR DRAINAGE BOXES.
3. PUNGENT ODORS COMING FROM THE DRAINAGE SYSTEMS.
4. ABNORMAL WATER FLOW DURING THE DRY WEATHER SEASON.
5. URBAN AREAS – EVIDENCE OF ILLICIT CONNECTIONS OR ILLEGAL DISCHARGES IS TYPICALLY DETECTED AT THE STORM DRAIN OUTFALL LOCATION OR AT THE MANHOLES. SIGNS OF AN ILLICIT CONNECTION OR ILLEGAL DISCHARGE CAN INCLUDE:
   - ABNORMAL WATER FLOW DURING THE DRY WEATHER SEASON
   - UNUSUAL FLOWS IN SUB-DRAIN SYSTEMS USED FOR DEWATERING.
   - PUNGENT ODORS COMING FROM THE DRAINAGE SYSTEMS.
   - DISCOLORATION OR OILY SUBSTANCES IN THE WATER OR STAINS AND RESIDUES DETAINED WITHIN DITCHES.
   - EXCESSIVE SEDIMENT DEPOSITS, PARTICULARLY ADJACENT TO OR NEAR ACTIVE OFF-SITE CONSTRUCTION.
5. NOTIFY THE PROJECT SUPERINTENDENT OF ANY ILLICIT CONNECTIONS, DUMPINGS, OR DISCHARGES AT THE TIME OF DISCOVERY.
6. VEHICLES AND EQUIPMENT SHOULD BE WASHED OFF SITE AT A CONTROLLED WASH FACILITY WHEN AT ALL POSSIBLE.
7. USE "DRY CLEANING METHODS" SUCH AS WIPING DOWN WHENEVER POSSIBLE RATHER THAN WATER WASHING VEHICLES ON SITE.
8. IF CLEANING MUST BE CONDUCTED ON-SITE, IT SHALL BE CONDUCTED IN A DEDICATED AREA WITH THE FOLLOWING CHARACTERISTICS:
   - LOCATED AWAY FROM THE STORM DRAIN INLETS, DRAINAGE FACILITIES, OR WATERCOURSES.
   - PAVED WITH CONCRETE OR ASPHALT, OR STABILIZED WITH AN AGGREGATE BASE.
   - BERMED TO CONTAIN WASH WATERS AND TO PREVENT RUN-ON AND RUNOFF.
   - CONFIGURED WASH AREA WITH A SUMP TO ALLOW COLLECTION AND DISPOSAL OF WASH WATER.
   - DISCHARGE WASH WATER TO A SANITARY OR PROCESS WASTE SEWER (WHERE PERMITTED), OR TO A DEAD END SUMP. WASH WATERS SHALL NOT BE DISCHARGED TO STORM DRAINS OR WATERCOURSES.
   - USED ONLY WHEN NECESSARY.
9. WHEN CLEANING VEHICLES OR EQUIPMENT WITH WATER:
   - USE AS LITTLE WATER AS POSSIBLE. CONSIDER USING A HIGH PRESSURE SPRAYER AND USE THE POSITIVE SHUTOFF VALVE.
   - DO NOT USE SOLVENTS OR DETERGENTS TO CLEAN VEHICLES OR EQUIPMENT ON SITE.
   - DO NOT USE STEAM CLEANING ON SITE.
10. INSPECT AND CLEAN WORK AREAS REGULARLY TO LIMIT WIND BLOWN DEBRIS AND POLLUTANTS TRANSPORTED BY STORMWATER.

TO REUSE AND RECYCLE CONSTRUCTION WASTES:

1. USE TRENCH SPOILS AND CUT AREA SOIL FOR FILL. UNSUITABLE AND EXCESS MATERIAL SHALL BE HAULED OFF SITE TO AN APPROVED LOCATION, IMPORTED FILL MATERIAL SHALL BE APPROVED BY THE PROJECTS GEOTECHINICAL ENGINEER.

BAR IS ONE INCH ON ORIGINAL DRAWING.
ADJUST SCALE AS SHOWN ACCORDINGLY.

REV.	DESCRIPTION	REVISED BY	DATE

REVISIONS

DIGITAL SIGNATURE
REGISTERED PROFESSIONAL ENGINEER 11529 OREGON APR 29, 1982 CURTIS J. McLEOD
EXP 12/2016

CURRAN-McLEOD, INC.
CONSULTING ENGINEERS
6655 S.W. HAMPTON ST., SUITE 210
PORTLAND, OREGON 97223
PHONE (503) 684-3478

HOLLEMAN PROPERTIES
CABINET SHOP CONSTRUCTION

EROSION CONTROL PLAN DETAILS & NOTES

MARION COUNTY, OREGON

DATE	OCT 2015
F/N	GENERAL
D/R	CJM
B/S	PCB
CADd	

C4 *OF* C11

(Curt)Holleman Properties\Hubbard - MH Cabinetry Shop - As-Built Plans\MH Cabinetry Shop Drawing C3-C10-AS-BUILT.dwg, 4/11/2017 3:41:38 PM, PDF Architect 4.pc3

RECORD DRAWING

INFORMATION TO CREATE THIS RECORD DRAWING WAS BASED ON INFORMATION OBTAINED FROM THE CONTRACTOR AND/OR ON-SITE OBSERVATIONS.

FEBRUARY 2017

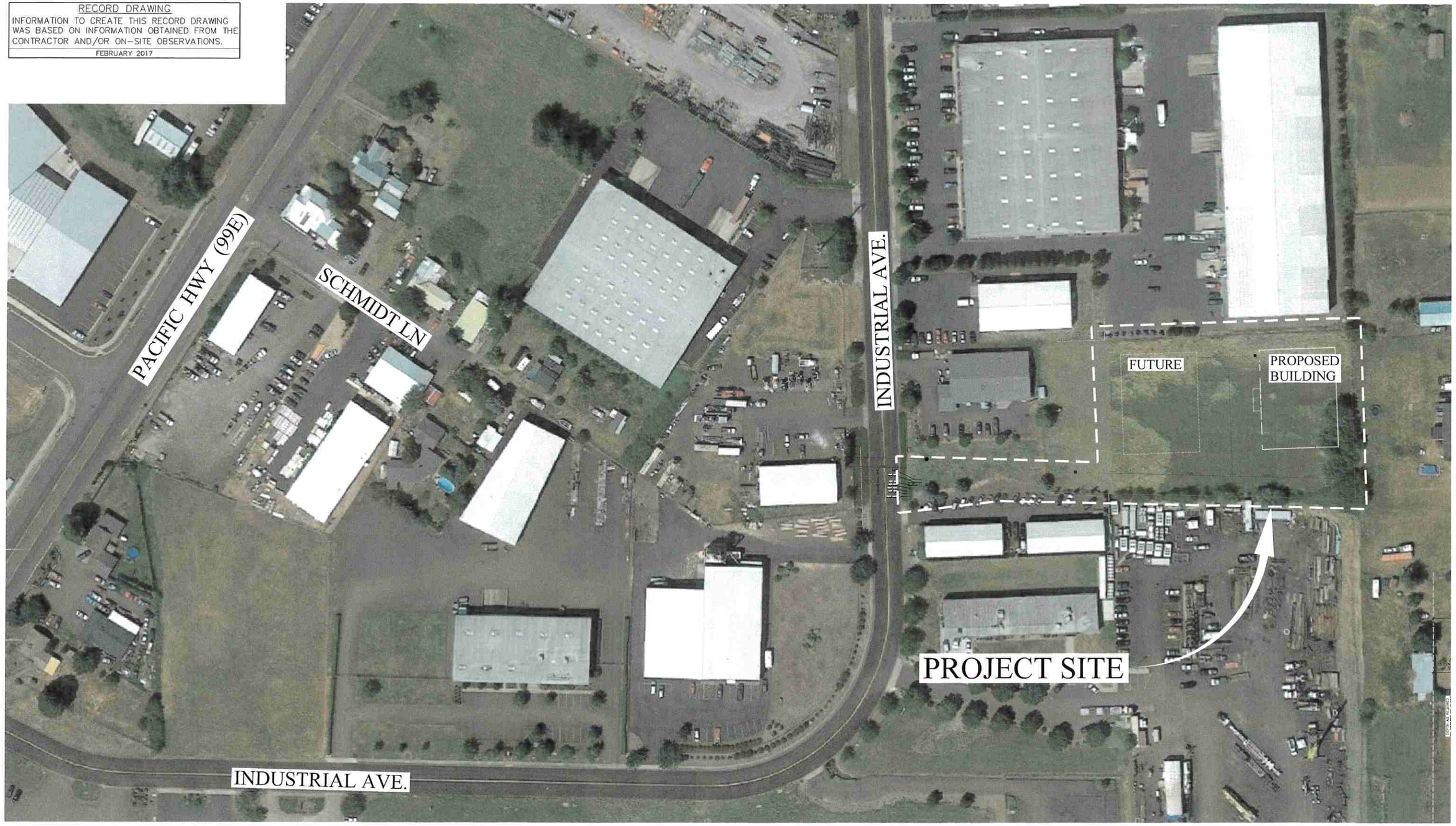

PROJECT AREA MAP - HUBBARD, OR

SCALE: 1" = 60'

BAR IS ONE INCH ON ORIGINAL DRAWING.

ADJUST SCALE AS SHOWN ACCORDINGLY.

REV.	DESCRIPTION	REVISED BY	DATE

REVISIONS

DIGITAL SIGNATURE

REGISTERED PROFESSIONAL ENGINEER 11529 OREGON APR 29, 1982 CURTIS J. McLEOD

12/2016

CURRAN-McLEOD, INC.
CONSULTING ENGINEERS

6655 S.W. HAMPTON ST., SUITE 210
PORTLAND, OREGON 97223
PHONE (503) 684-3478

HOLLEMAN PROPERTIES
CABINET SHOP CONSTRUCTION

PROJECT AREA MAP

MARION COUNTY, OREGON

DATE	OCT 2015
P/N	GENERAL
D/R	CJM
D/S	PCB
CASE	

C5 *OF* C11

\Curt\HollemanProperties\Hubbard - MH Cabinetry Shop - As-Built Plans\MH Cabinetry Shop Drawing C1-C10-As-Built.T.dwg, 4/11/2017 2:16:35 PM, PDF Architect 4.pc3

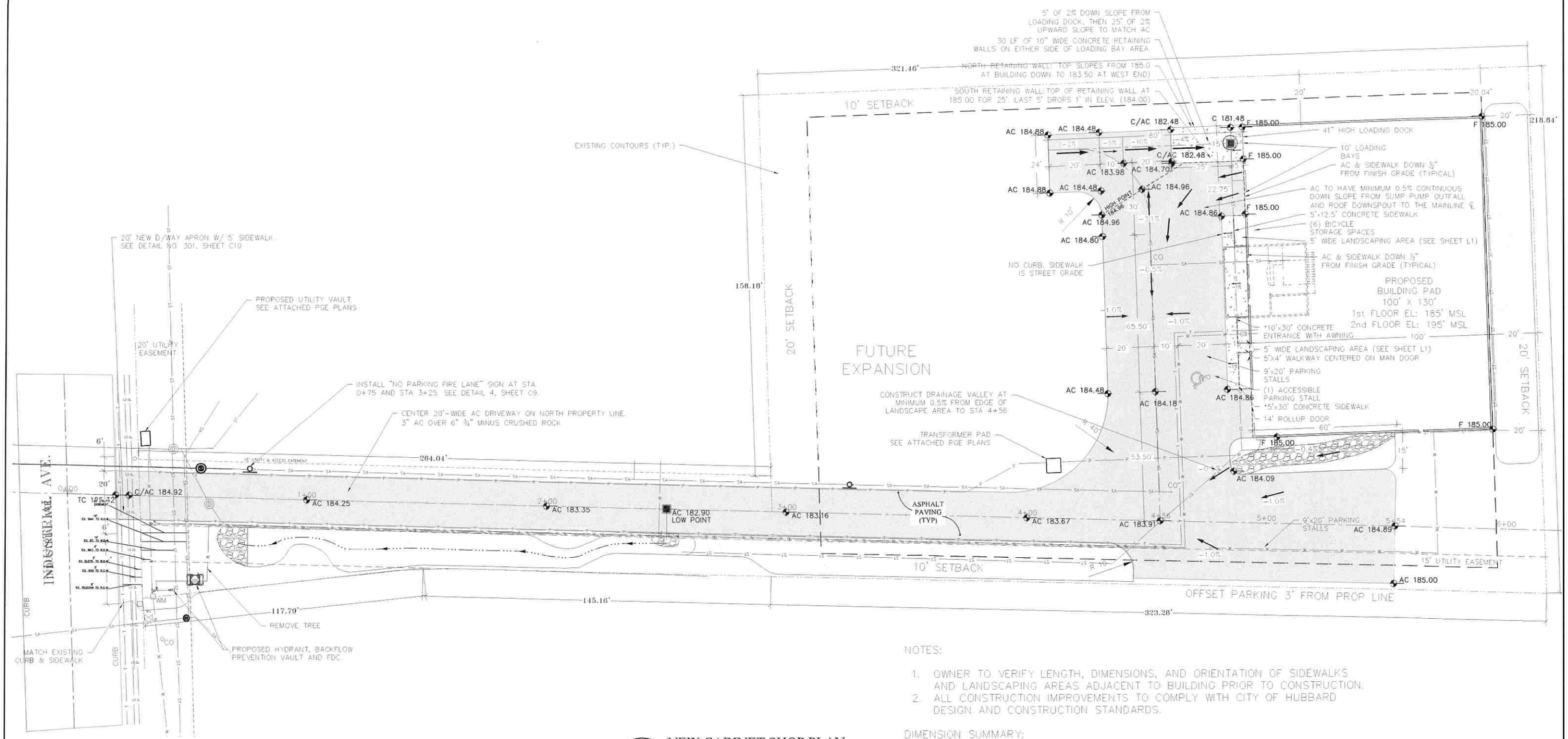

1 NEW CABINET SHOP PLAN

SCALE: 1" = 20'

NOTES:

1. OWNER TO VERIFY LENGTH, DIMENSIONS, AND ORIENTATION OF SIDEWALKS AND LANDSCAPING AREAS ADJACENT TO BUILDING PRIOR TO CONSTRUCTION.
2. ALL CONSTRUCTION IMPROVEMENTS TO COMPLY WITH CITY OF HUBBARD DESIGN AND CONSTRUCTION STANDARDS.

DIMENSION SUMMARY:
LOT AREA: 1.731 ACRE (75,400 SF)
AC AREA: 0.530 ACRE (23,090 SF)
ROOF AREA: 0.298 ACRE (13,000 SF)
TOTAL LANDSCAPING AREA: 0.226 ACRE (9,840 SF) (MINIMUM 7,600 SF)
DETENTION POND VOLUME: 2,200 CF (MINIMUM)
DETENTION POND AREA: 0.050 ACRE (2,340 SF)
LANDSCAPING – XERISCAPED: 0.139 ACRE (6,073 SF)

RECORD DRAWING
INFORMATION TO CREATE THIS RECORD DRAWING WAS BASED ON INFORMATION OBTAINED FROM THE CONTRACTOR AND/OR ON-SITE OBSERVATIONS.
FEBRUARY 2017

BAR IS ONE INCH ON ORIGINAL DRAWING.
ADJUST SCALE AS SHOWN ACCORDINGLY.

REV.	DESCRIPTION	REVISED BY	DATE

REVISIONS

DIGITAL SIGNATURE
REGISTERED PROFESSIONAL ENGINEER 11529 OREGON APR 28, 1993 CURTIS J. McLEOD
EXP 12/2016

CURRAN–McLEOD, INC.
CONSULTING ENGINEERS
6655 S.W. HAMPTON ST., SUITE 210
PORTLAND, OREGON 97223
PHONE (503) 684-3478

HOLLEMAN PROPERTIES
CABINET SHOP CONSTRUCTION

SITE PLAN

MARION COUNTY, OREGON

DATE	OCT 2015
P/N	GENERAL
D/R	CJM
D/S	PCB
C-FILE	

C6 *OF* C11

(Curt)Holleman Properties\Hubbard - MH Cabinetry Shop - As-Built Plans\MH Cabinetry Shop Drawing C1-C10-AS-BUILT.dwg, 4/11/2017 3:46:12 PM, PDF Architect 5.pc3

NOTES

* INSTALL 1½" PVC SCH. 40 WATER LINE, 6" PVC C900 WATER LINE FOR FIRE SERVICE, 2 – 1½" PVC SCH. 40 CONDUITS FOR PHONE AND CABLE, AND 4" PVC 3034 CASING FOR GAS IN COMMON TRENCH. INSTALL 6" PVC 3034 SANITARY SEWER SERVICE AND 4" PVC SCH. 40 FOR POWER SERVICES IN SEPARATE COMMON TRENCH.

OWNER TO VERIFY: ALL SERVICE REQUIREMENTS WITH EACH UTILITY PROVIDER, LOCATION AND REQUIREMENTS FOR TRANSFORMER, POWER CONDUIT SIZE AND LOCATION, AND METER BASE WITH POWER COMPANY.

VERIFY SUFFICIENT SEPARATION BETWEEN POWER, GAS AND ALL OTHER UTILITIES AT ALL TRENCH INTERSECTIONS

OWNER TO COORDINATE ALL UTILITY CONNECTIONS WITH PROVIDERS PRIOR TO CONSTRUCTION. FIELD VERIFY SOURCE CONNECTION POINTS TO ALL UTILITIES.

FIRE SUPPRESSION SYSTEM TO INCLUDE WATER FLOW ALARM AND BACKFLOW DEVICE.

ROUTE ALL ROOF DRAINS TO DISCHARGE TO AC SURFACES.

POTHOLE & FIND AND/OR VERIFY INVERT ELEVATIONS FOR ALL UTILITIES PRIOR TO CONSTRUCTION.

OUTFIT ALL CATCHBASINS AND INLETS WITH APPROVED TURNDOWNS AND SUMPS FOR OIL WATER SEPARATION AND SEDIMENTATION CONTROL.

OWNER TO VERIFY DEPTH OF EXISTING SANITARY SEWER LATERAL AT PROPOSED MANHOLE PRIOR TO CONSTRUCTION. OWNER TO VERIFY PIPE COVER FOR SANITARY SERVICE FROM MANHOLE TO BUILDING.

OWNER TO VERIFY LOCATIONS OF ALL UTILITIES ENTERING BUILDING.

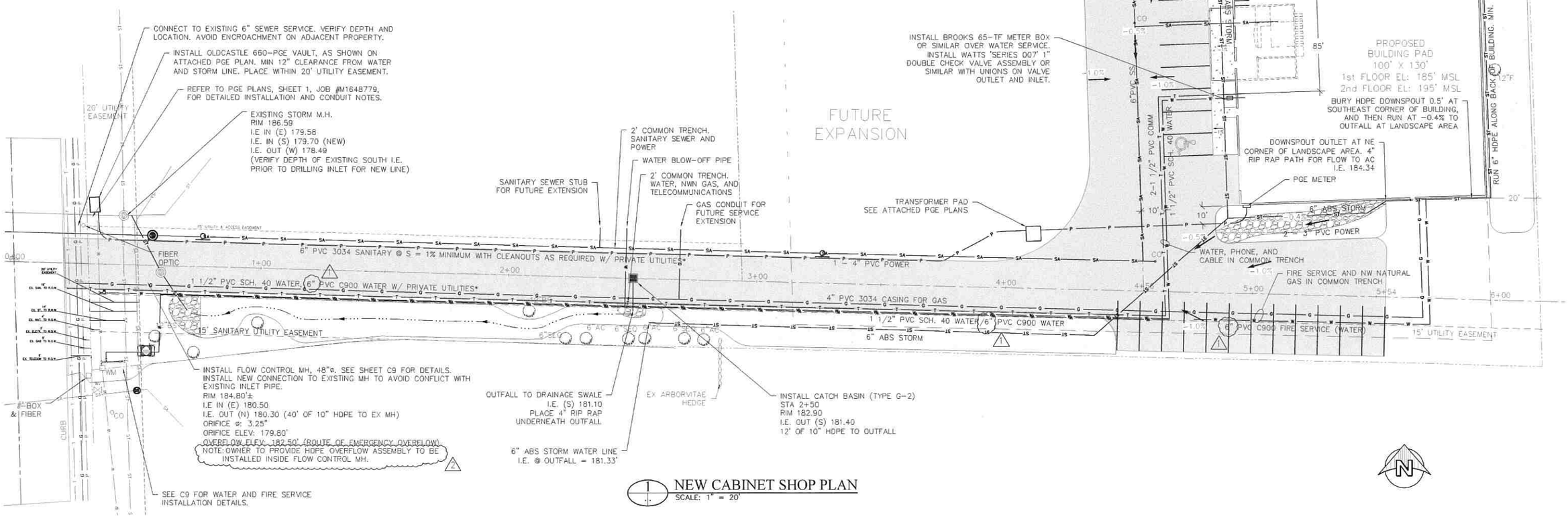

NEW CABINET SHOP PLAN

SCALE: 1" = 20'

RECORD DRAWING

INFORMATION TO CREATE THIS RECORD DRAWING WAS BASED ON INFORMATION OBTAINED FROM THE CONTRACTOR AND/OR ON-SITE OBSERVATIONS.

FEBRUARY 2017

BAR IS ONE INCH ON ORIGINAL DRAWING.

ADJUST SCALE AS SHOWN ACCORDINGLY.

REV.	DESCRIPTION	REVISED BY	DATE
2	INCREASE FIRE SERVICE WATER LINE FROM 6" & 4" TO ALL 6"	PCB	2/4/2016
1	CLARIFIED ADDITION OF FLOW CONTROL MH	PCB	2/4/2016

REVISIONS

DIGITAL SIGNATURE

REGISTERED PROFESSIONAL ENGINEER 11529 OREGON APR 29, 1992 CURTIS J. McLEOD

EXP 12/2016

CURRAN–McLEOD, INC.
CONSULTING ENGINEERS
6655 S.W. HAMPTON ST., SUITE 210
PORTLAND, OREGON 97223
PHONE (503) 684-3478

HOLLEMAN PROPERTIES
CABINET SHOP CONSTRUCTION

UTILITIES PLAN

MARION COUNTY, OREGON

DATE	OCT 2015
P.N	GENERAL
D/B	CJM
D/S	PCB
CAD#	

C7 *OF* C11

(Curt)HollemanProperties\Husband - HH Cabinetry Shop - As-Built Plans\HH Cabinetry Shop Drawing C1-C10-AS-BUILT.dwg, 4/11/2017 3:46:15 PM, PDF Architect 4.pc3

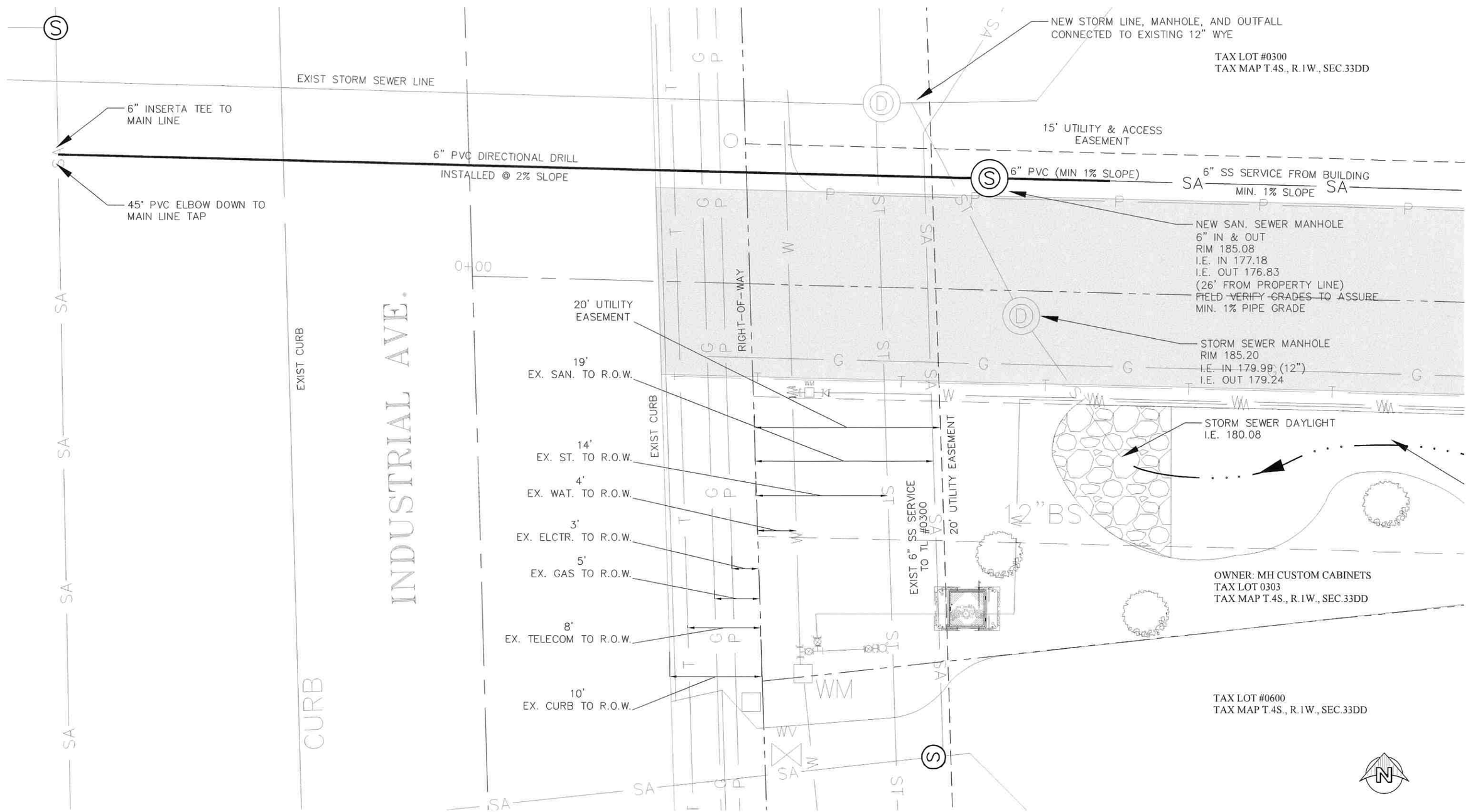

UTILITIES DETAIL
SCALE: 1" = 5'

RECORD DRAWING
INFORMATION TO CREATE THIS RECORD DRAWING WAS BASED ON INFORMATION OBTAINED FROM THE CONTRACTOR AND/OR ON-SITE OBSERVATIONS.
FEBRUARY 2017

BAR IS ONE INCH ON ORIGINAL DRAWING.
ADJUST SCALE AS SHOWN ACCORDINGLY.

REV.	DESCRIPTION	REVISED BY	DATE
1	SANITARY SEWER SERVICE LATERAL REVISION	JJB	07/26/2016

REVISIONS

DIGITAL SIGNATURE
REGISTERED PROFESSIONAL ENGINEER 11529 OREGON APR 29, 1982 CURTIS J. McLEOD
Exp. 12/31/2016

CURRAN-McLEOD, INC.
CONSULTING ENGINEERS
6655 S.W. HAMPTON ST., SUITE 210
PORTLAND, OREGON 97223
PHONE (503) 684-3478

HOLLEMAN PROPERTIES
CABINET SHOP CONSTRUCTION

SANITARY SEWER SERVICE DETAIL

MARION COUNTY, OREGON

DATE	AUG 2016
P/N	GENERAL
D/B	CJM
D/S	PCB
CADM	

C7A
OF
C11

(Curt)Holleman Properties\Hubbard - MH Cabinetry Shop - As-Built Plans\MH Cabinetry Shop Drawing C1-C10-AS-BUILT.dwg, 4/11/2017 3:47:21 PM, PDF Architect 3.pc3

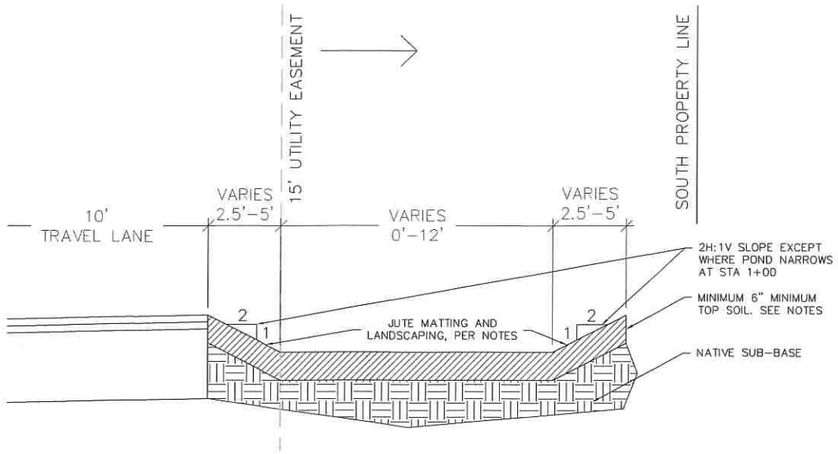

SECTION A-A

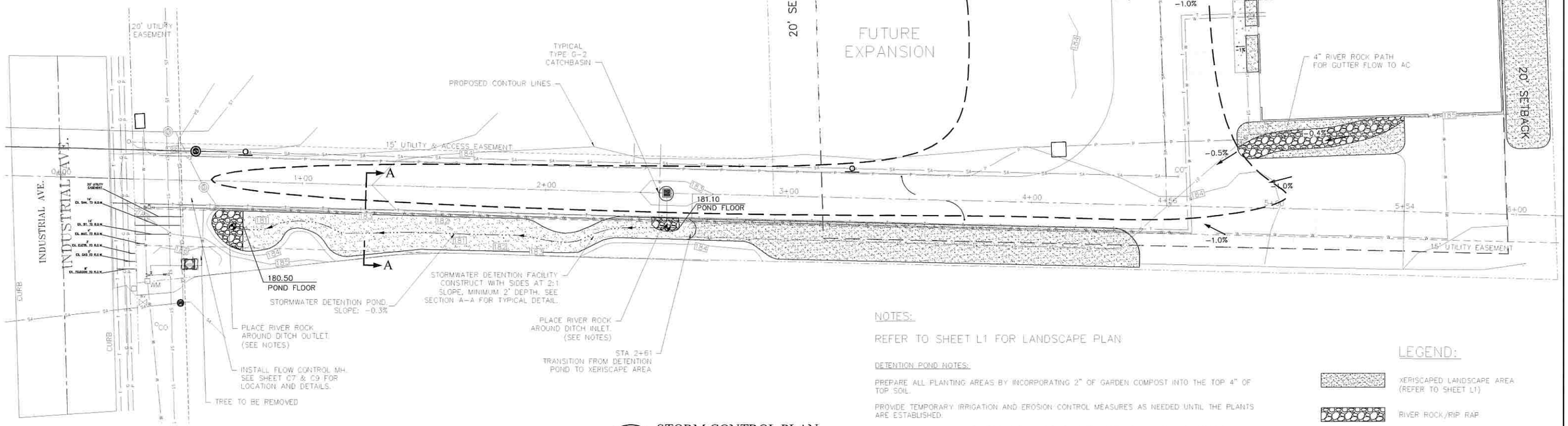

STORM CONTROL PLAN
SCALE: 1" = 20'

NOTES:

REFER TO SHEET L1 FOR LANDSCAPE PLAN

DETENTION POND NOTES:

PREPARE ALL PLANTING AREAS BY INCORPORATING 2" OF GARDEN COMPOST INTO THE TOP 4" OF TOP SOIL.

PROVIDE TEMPORARY IRRIGATION AND EROSION CONTROL MEASURES AS NEEDED UNTIL THE PLANTS ARE ESTABLISHED.

DURING THE MAINTENANCE PERIOD (12 MONTHS AFTER COMPLETION) ALL NOXIOUS WEEDS SHALL PERIODICALLY BE REMOVED FROM THE POND AREA.

PLACE PRO TIME 705 (XERISCAPE OR DROUGHT-TOLERANT VARIETIES) OR SIMILAR THROUGH POND AREA. PLANT MIX SHOULD BE PLACED BETWEEN FEB 1 AND MAY 1 OR BETWEEN OCT 1 AND NOV 15. OWNER TO VERIFY DESIRED PLANT MIX.

PLACE 6" OF 4" RIVER ROCK AT INLETS AND OUTLETS AS SHOWN.

PLACE JUTE MATTING OVER 6" MINIMUM TOP SOIL.

LEGEND:

XERISCAPED LANDSCAPE AREA (REFER TO SHEET L1)

RIVER ROCK/RIP RAP

EXISTING TREE LOCATION (PROTECT UNLESS OTHERWISE NOTED)

RECORD DRAWING
INFORMATION TO CREATE THIS RECORD DRAWING WAS BASED ON INFORMATION OBTAINED FROM THE CONTRACTOR AND/OR ON-SITE OBSERVATIONS.
FEBRUARY 2017

BAR IS ONE INCH ON ORIGINAL DRAWING.
ADJUST SCALE AS SHOWN ACCORDINGLY.

REV.	DESCRIPTION	REVISED BY	DATE

REVISIONS

DIGITAL SIGNATURE
REGISTERED PROFESSIONAL ENGINEER 11529 OREGON APR 29, 1993 CURTIS J. McLEOD
Exp 12/2016

CURRAN-McLEOD, INC.
CONSULTING ENGINEERS
6655 S.W. HAMPTON ST., SUITE 210
PORTLAND, OREGON 97223
PHONE (503) 684-3478

HOLLEMAN PROPERTIES
CABINET SHOP CONSTRUCTION

STORM CONTROL PLAN

MARION COUNTY, OREGON

DATE	OCT 2015
P/N	GENERAL
D/R	CJM
D/S	PCB
CADd	

C8 OF C11

(Curt)Holleman Properties\Hubbard - HH Cabinetry Shop - As-Built Plans\HH Cabinetry Shop Drawing C1-C10-AS-BUILT.dwg, 9/11/2017 3:47:48 PM, PDF Architect 4.pc3

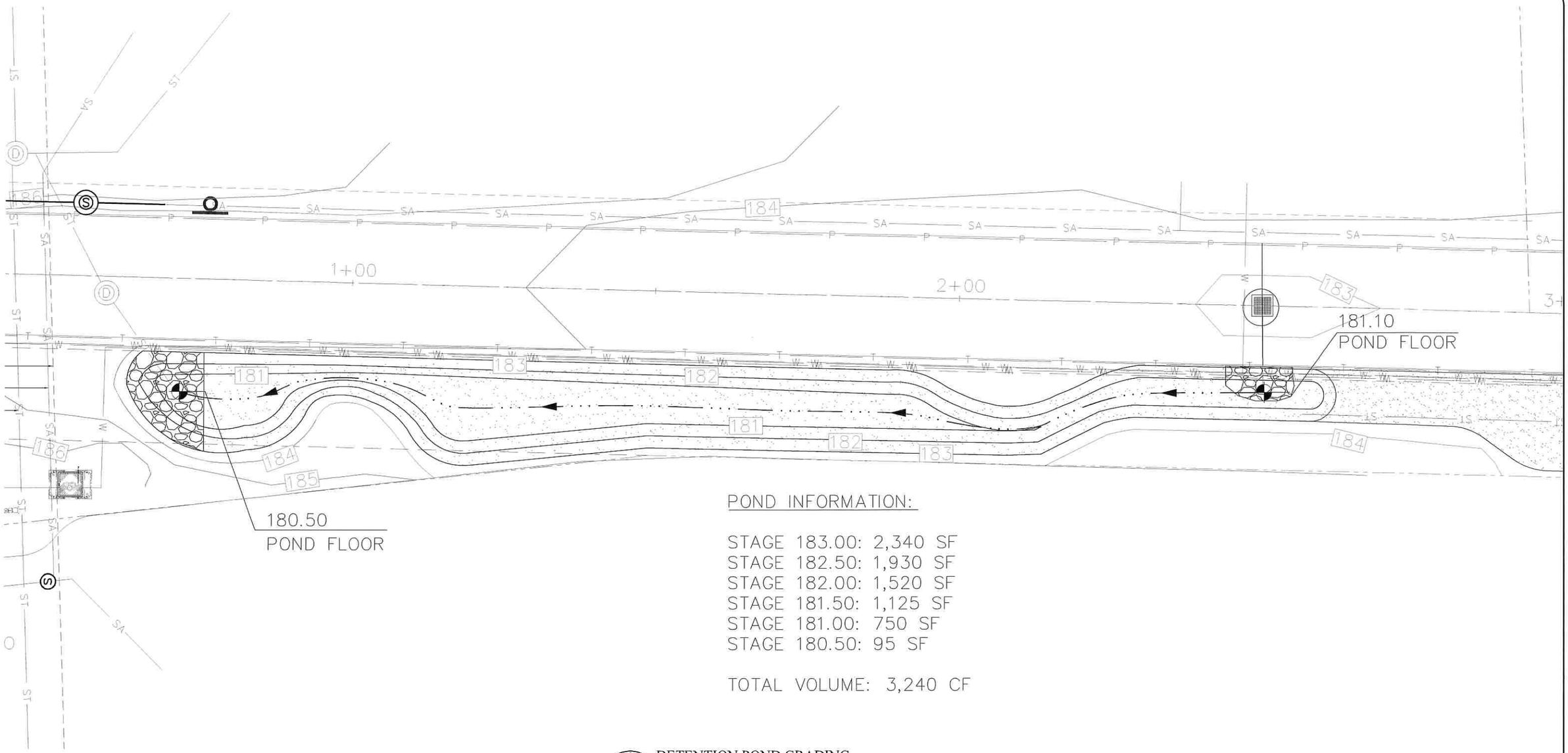

POND INFORMATION:

STAGE 183.00: 2,340 SF
STAGE 182.50: 1,930 SF
STAGE 182.00: 1,520 SF
STAGE 181.50: 1,125 SF
STAGE 181.00: 750 SF
STAGE 180.50: 95 SF

TOTAL VOLUME: 3,240 CF

DETENTION POND GRADING
SCALE: 1" = 8'

RECORD DRAWING
INFORMATION TO CREATE THIS RECORD DRAWING WAS BASED ON INFORMATION OBTAINED FROM THE CONTRACTOR AND/OR ON-SITE OBSERVATIONS.
FEBRUARY 2017

BAR IS ONE INCH ON ORIGINAL DRAWING.
ADJUST SCALE AS SHOWN ACCORDINGLY.

REV.	DESCRIPTION	REVISED BY	DATE

REVISIONS

DIGITAL SIGNATURE
REGISTERED PROFESSIONAL ENGINEER 11529 OREGON APR 29, 1993 CURTIS J. McLEOD
EXP 12/2016

CURRAN-McLEOD, INC.
CONSULTING ENGINEERS
6655 S.W. HAMPTON ST., SUITE 210
PORTLAND, OREGON 97223
PHONE (503) 684-3478

HOLLEMAN PROPERTIES
CABINET SHOP CONSTRUCTION

DETENTION POND GRADING

MARION COUNTY, OREGON

DATE	OCT 2015
P.N	GENERAL
D.B	CJM
D.S	PCB
CAD#	

C8A
OF
C11

\Curt\Holleman Properties\Hobbard - MH Cabinetry Shop - As-Built Plans\MH Cabinetry Shop Drawing C1-C10-AS-BUILT.dwg, 4/11/2017 2:48:18 PM, PDF Architect 4.pc3

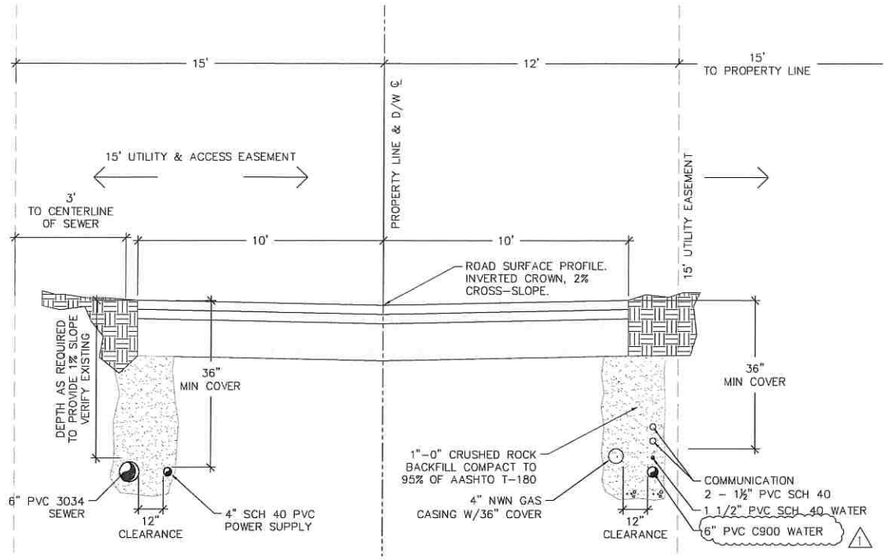

1 DRIVEWAY & UTILITY TRENCH DETAIL

SCALE: N.T.S.

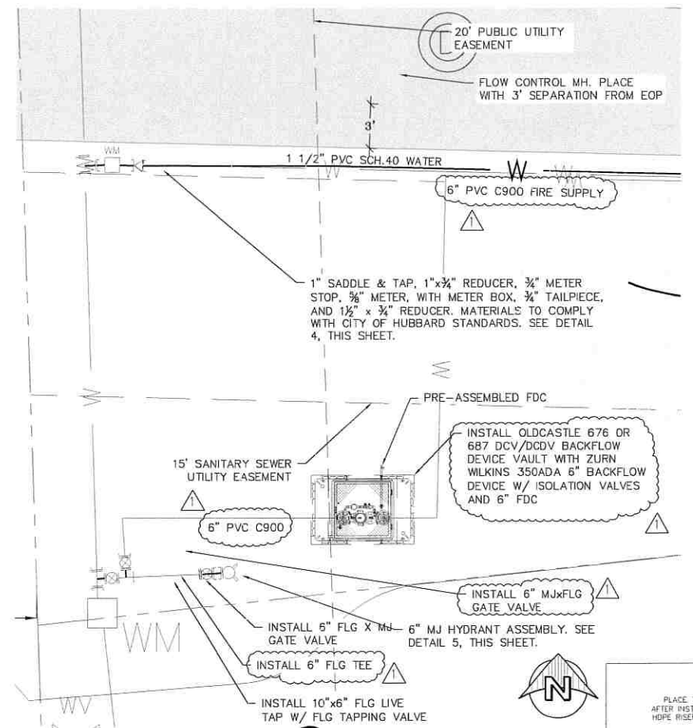

2 WATER TAP DETAIL

SCALE: 1" = 5'

NOTE: MAINLINE VALVE MAY BE DELETED IF TAPPING MECHANISM CAN EXTEND THROUGH THE TEE.

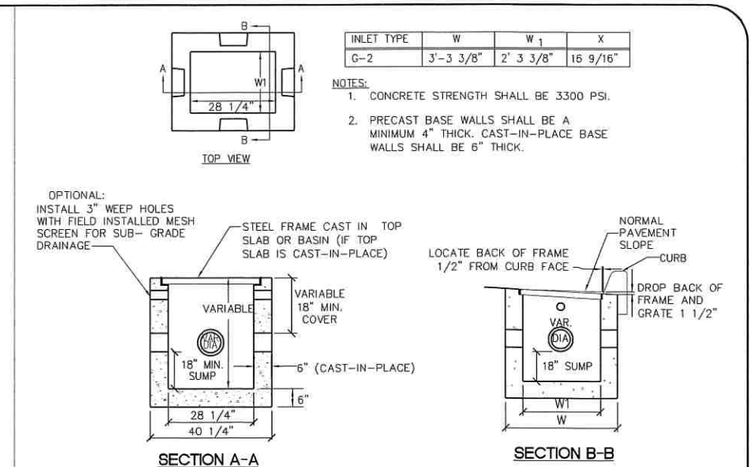

INLET TYPE	W	W 1	X
G-2	3'-3 3/8"	2' 3 3/8"	16 9/16"

NOTES:

1. CONCRETE STRENGTH SHALL BE 3300 PSI.
2. PRECAST BASE WALLS SHALL BE A MINIMUM 4" THICK. CAST-IN-PLACE BASE WALLS SHALL BE 6" THICK.

3 TYPE G-2 CATCH BASIN WITH SUMP

NOT TO SCALE

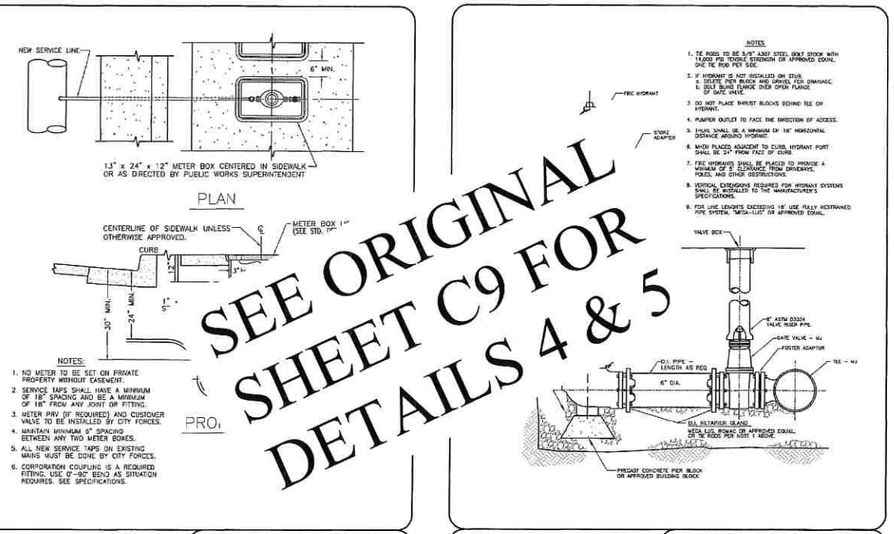

4 CITY OF HUBBARD WATER SERVICE DETAIL

SCALE: N.T.S.
STANDARD CONSTRUCTION DETAILS

5 CITY OF HUBBARD FIRE HYDRANT DETAIL

SCALE: N.T.S.
STANDARD CONSTRUCTION DETAILS

NOTES:

2 REQUIRED (APPROXIMATELY STA 0+75 AND 3+25)

MOUNT ON 2" GALVANIZED PERFORATED STEEL TUBING WITH SIGN 24" ABOVE GRADE.

6 W3623 (12"x18") "FIRE LANE" SIGN

SCALE: NTS

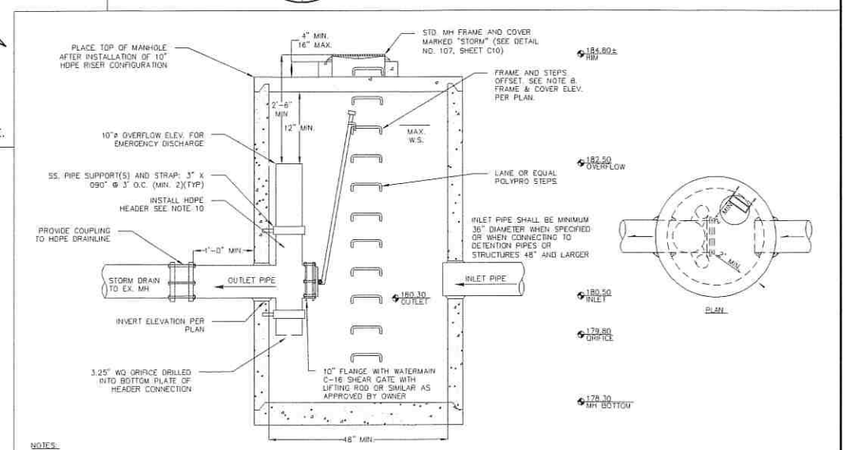

7 FLOW CONTROL MANHOLE DETAIL

N.T.S.

RECORD DRAWING

INFORMATION TO CREATE THIS RECORD DRAWING WAS BASED ON INFORMATION OBTAINED FROM THE CONTRACTOR AND/OR ON-SITE OBSERVATIONS.

FEBRUARY 2017

RECORD DRAWING

INFORMATION TO CREATE THIS RECORD DRAWING WAS BASED ON INFORMATION OBTAINED FROM THE CONTRACTOR AND/OR ON-SITE OBSERVATIONS.

FEBRUARY 2017

BAR IS ONE INCH ON ORIGINAL DRAWING.

ADJUST SCALE AS SHOWN ACCORDINGLY.

REV.	DESCRIPTION	REVISED BY	DATE
A	INCREASE FIRE SERVICE WATER LINE FROM 6" & 4" TO ALL 6"	PCB	2/4/2016

REVISIONS

DIGITAL SIGNATURE
REGISTERED PROFESSIONAL ENGINEER 11529 OREGON APR 29, 1993 CURTIS J. McLEOD
Exp 12/2016

CURRAN-McLEOD, INC.
CONSULTING ENGINEERS
6655 S.W. HAMPTON ST., SUITE 210
PORTLAND, OREGON 97223
PHONE (503) 684-3478

HOLLEMAN PROPERTIES
CABINET SHOP CONSTRUCTION

CONSTRUCTION DETAILS

MARION COUNTY, OREGON

DATE	OCT 2015
P/N	GENERAL
D/R	CJM
D/S	PCB
CAD#	

C9 OF C11

\Curt\Holleman Properties\Hubbard - HH Cabinetry Shop - - As-Built Plans\HH Cabinetry Shop Drawing C1-C10-AS-BUILT.dwg, 4/11/2017 3:49:09 PM, PDF Architect 4.pc3

NOTES:

1. CONCENTRIC CONE ALLOWED ONLY WHEN SPECIFIED.
2. FLEXIBLE PIPE-TO-MANHOLE CONNECTIONS SHALL BE INSTALLED ACCORDING TO MANUFACTURES SPECIFICATIONS.
3. INTERNAL RUBBER CHIMNEY SEAL SHALL BE FLEX-SEAL OR CRETEX OR APPROVED EQUAL. THE CHIMNEY SEAL MAY BE DELETED WHEN MANHOLE IS ADJUSTED AFTER PAVING PER STD. PLAN No.104.
4. WATER TIGHT JOINTS (GROUT JOINTS SMOOTH AT MANHOLE INTERIOR).
5. FOR ALTERNATE MANHOLE CONFIGURATION, PROVIDE 8 FT. OF HEADROOM WHENEVER POSSIBLE.
6. POSITION MANHOLE LID OVER OUTLET PIPE.
7. ALL SECTIONS MUST MEET OR EXCEED ASTM C 478.
8. FLAT-TOP MANHOLE ACCEPTABLE ALTERNATE (SEE STD. DETAIL NO. 205)
9. SEE STD. PLAN No.107, LOCK-DOWN MANHOLE COVERS PER STD. PLAN No.117 REQUIRED WHEN MANHOLES ARE LOCATED OUTSIDE OF PUBLIC RIGHT-OF-WAY.

TABLE

PIPE SIZE	MANHOLE DIAMETER	WALL THICKNESS
≤21"	48"	5"
24"-30"	60"	6"
36"-42"	72"	7"
48"-54"	84"	8"

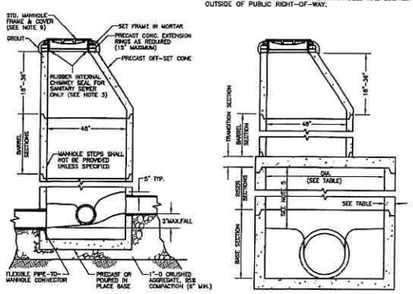

STANDARD MANHOLE CONFIGURATION

ALTERNATE MANHOLE CONFIGURATION

CITY OF HUBBARD

STANDARD DETAIL DRAWING

MANHOLE

DRAWN: K.L.C. | DATE: 9-16-08

APPROVED: W.I.P. | NO. 101

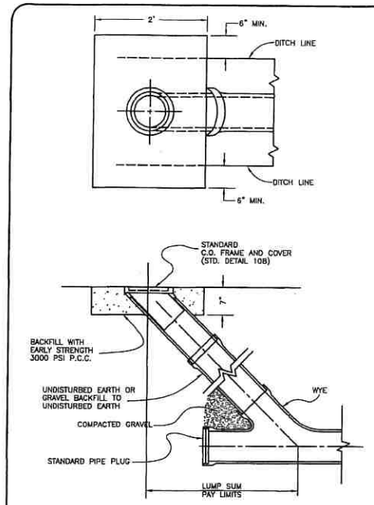

CITY OF HUBBARD

STANDARD DETAIL DRAWING

SANITARY SEWER CLEANOUT

DRAWN: K.L.C. | DATE: 9-16-08

APPROVED: W.I.P. | NO. 105

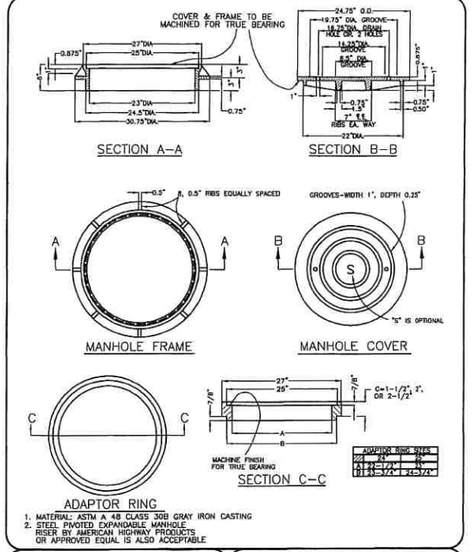

1. MATERIAL: ASTM A 48 CLASS 30B GRAY IRON CASTING
2. STEEL PIVOTED EXPANDABLE MANHOLE RISER BY AMERICAN HIGHWAY PRODUCTS OR APPROVED EQUAL IS ALSO ACCEPTABLE

CITY OF HUBBARD

STANDARD DETAIL DRAWING

MANHOLE CASTING DETAIL

DRAWN: K.L.C. | DATE: 9-16-08

APPROVED: W.I.P. | NO. 107

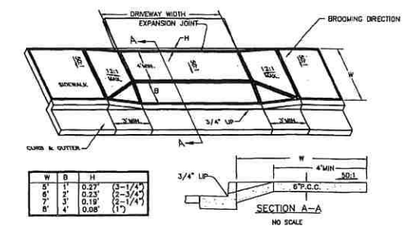

W	B	H	
5'	1'	0.23'	(3-1/4")
6'	2'	0.23'	(2-3/4")
7'	3'	0.19'	(2-1/4")
8'	4'	0.08'	(1")

NOTES:

1. DRIVEWAY WIDTH SHALL NORMALLY BE SHOWN ON PROJECT PLANS. THE DRIVEWAY WIDTH SHALL NOT EXCEED THE FOLLOWING LIMITS:
   SINGLE DWELLING LIMITS: 36'-0" MAXIMUM WIDTH — 12'-0" MINIMUM WIDTH
   COMMERCIAL AND INDUSTRIAL: 36'-0" MAXIMUM WIDTH — 12'-0" MINIMUM WIDTH (SINGLE); 20'-0" MINIMUM WIDTH (DOUBLE)
2. SIDEWALKS, INCLUDING THAT PORTION CROSSING THE DRIVEWAY SHALL HAVE TRANSVERSE CONTRACTION JOINTS AT 5' INTERVALS AND TOOL ROUNDED BEFORE BROOMING. ALL EDGES SHALL BE TOOL ROUNDED AND SHINED (3") AFTER BROOMING.
3. WHEN EXISTING DRIVEWAY CANNOT BE MATCHED TO NEW DRIVEWAY WITHIN SLOPE LIMITATIONS SHOWN, ADJUST EXISTING DRIVEWAY-NOT CURB AND SIDEWALK GRADE.
4. THE DIMENSIONS OF DRIVEWAY APPROACH SHALL NOT BE ADJUSTED WITHOUT SPECIFIC PRIOR (BEFORE FORMING) APPROVAL OF THE INSPECTOR.
5. CONCRETE STRENGTH SHALL BE 3000 P.S.I. IN 28 DAYS.
6. THE 50H:1V CROSS-SLOPE OF SIDEWALK IS MEASURED FROM HORIZONTAL. THE 12H:1V SLOPE SIDEWALK TRANSITION TO DRIVEWAY IS RELATIVE TO THE RUNNING SLOPE OF THE SIDEWALK.
7. SEE SIDEWALK DETAILS FOR RESTRICTIONS AND SPECIFICATIONS NOT SHOWN.
8. NO LIP AT GUTTER IF USED AS SIDEWALK ACCESS RAMP. IF ACCESS RAMP, MAXIMUM SLOPE ON "B" IS 12H:1V INCREASE "H" VALUE IN TABLE ABOVE BY 0.12'.
9. CONFORM TO VISION CLEARANCE REQUIREMENTS AS FOUND IN COH DEVELOPMENT CODE.

CITY OF HUBBARD

STANDARD DETAIL DRAWING

DRIVEWAY APPROACH CURBLINE SIDEWALK

DRAWN: K.L.C. | DATE: 9-16-08

APPROVED: W.I.P. | NO. 301

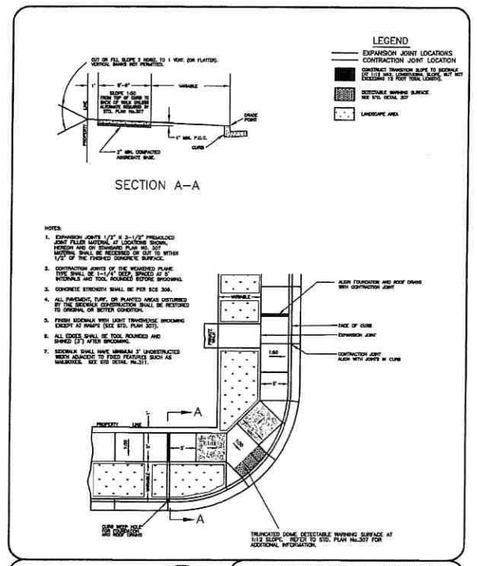

CITY OF HUBBARD

STANDARD DETAIL DRAWING

SIDEWALK DETAIL

DRAWN: K.L.C. | DATE: 9-16-08

APPROVED: W.I.P. | NO. 306

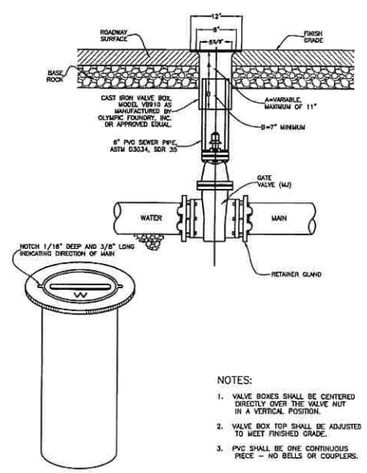

"VANCOUVER" 18" TALL VALVE BOX

NOTES:

1. VALVE BOXES SHALL BE CENTERED DIRECTLY OVER THE VALVE NUT IN A VERTICAL POSITION.
2. VALVE BOX TOP SHALL BE ADJUSTED TO MEET FINISHED GRADE.
3. PVC SHALL BE ONE CONTINUOUS PIECE – NO BELLS OR COUPLERS.

CITY OF HUBBARD

STANDARD DETAIL DRAWING

WATER VALVE BOX

DRAWN: K.L.C. | DATE: 9-16-08

APPROVED: W.I.P. | NO. 400

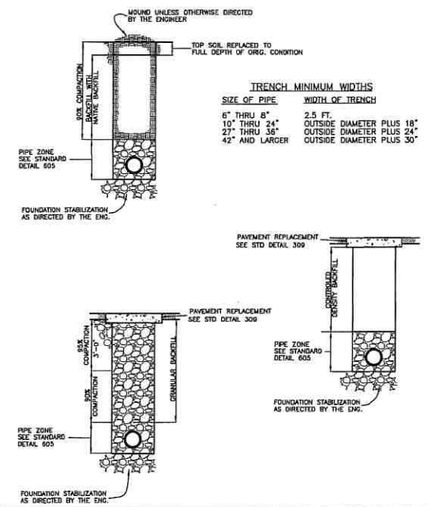

TRENCH MINIMUM WIDTHS

SIZE OF PIPE	WIDTH OF TRENCH
6" THRU 8"	2.5 FT.
10" THRU 24"	OUTSIDE DIAMETER PLUS 18"
27" THRU 36"	OUTSIDE DIAMETER PLUS 24"
42" AND LARGER	OUTSIDE DIAMETER PLUS 30"

CITY OF HUBBARD

STANDARD DETAIL DRAWING

PIPE TRENCH

DRAWN: K.L.C. | DATE: 9-16-08

APPROVED: W.I.P. | NO. 601

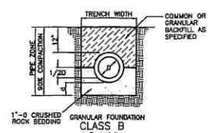

LEGEND:

D = OUTSIDE DIAMETER
d = DEPTH OF BEDDING MATERIAL BELOW PIPE

DEPTH OF BEDDING MATERIAL BELOW PIPE	
D	d(min).
12" & SMALLER	6"
15" to 36"	8"
42" & LARGER	10"

NOTES:

1. WHERE DIRECTED BY THE ENGINEER GRANULAR TRENCH STABILIZATION SHALL BE PLACED PRIOR TO PLACEMENT OF THE BEDDING. SIZE AND DEPTH ARE DEPENDENT ON SOIL CONDITIONS.
2. FOR ROCK OR OTHER INCOMPRESSIBLE MATERIALS, THE TRENCH SHALL BE OVEREXCAVATED A MINIMUM OF 6" AND REFILLED WITH GRANULAR MATERIAL AS DIRECTED BY THE ENGINEER.
3. BEDDING AND BACKFILL MATERIALS IN THE PIPE ZONE SHALL BE COMPACTED AS SPECIFIED PRIOR TO BACKFILLING THE REMAINDER OF THE TRENCH.

CITY OF HUBBARD

STANDARD DETAIL DRAWING

PIPE ZONE

DRAWN: K.L.C. | DATE: 9-16-08

APPROVED: W.I.P. | NO. 605

RECORD DRAWING

INFORMATION TO CREATE THIS RECORD DRAWING WAS BASED ON INFORMATION OBTAINED FROM THE CONTRACTOR AND/OR ON-SITE OBSERVATIONS.

FEBRUARY 2017

BAR IS ONE INCH ON ORIGINAL DRAWING.

ADJUST SCALE AS SHOWN ACCORDINGLY.

REV	DESCRIPTION	REVISED BY	DATE

REVISIONS

DIGITAL SIGNATURE

REGISTERED PROFESSIONAL ENGINEER 11529 OREGON APR 28, 1993 CURTIS J. McLEOD

Exp 12/2016

CURRAN-McLEOD, INC.
CONSULTING ENGINEERS

6655 S.W. HAMPTON ST., SUITE 210
PORTLAND, OREGON 97223
PHONE (503) 684-3478

HOLLEMAN PROPERTIES
CABINET SHOP CONSTRUCTION

CITY OF HUBBARD STANDARD DETAILS

MARION COUNTY, OREGON

DATE	OCT 2015
F/N	GENERAL
D/B	CJM
D/S	PCB
CAD#	

C10 OF C11

(Curt)HollemanProperties\Hubbard - MH Cabinetry Shop - As-Built Plans\MH Cabinetry Shop Drawing C1-C10-AS-BUILT.dwg, 4/11/2017 3:49:53 PM, PDF Architect 5.pc3

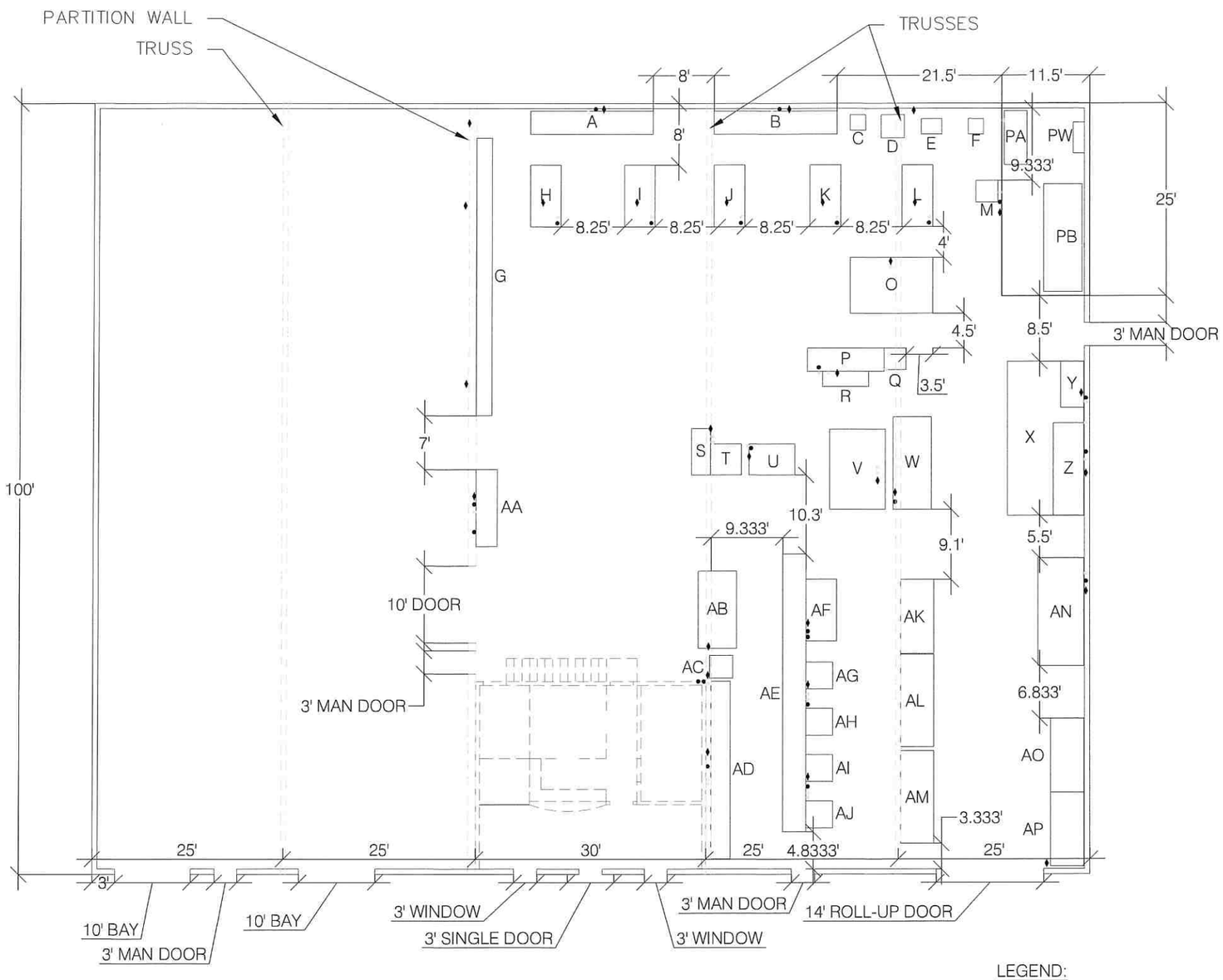

CABINET SHOP FLOOR PLAN

SCALE: 1" = 8'

LEGEND:

- ● ELECTRICAL SUPPLY
- ♦ COMPRESSED AIR SUPPLY

MACHINE POWER REQUIREMENTS

ID	MACHINE	DIM	POLE / VOLT	AMP
A	CHOP SAW	3'x6'	1 / 110	
B	CHOP SAW	3'x6'	1 / 110	
C	BAND SAW	2'x2'	1 / 110	
D	PROFILE SANDER	3'x3'	1 / 110	
E	DRILL PRESS	24"x32"	1 / 110	
F	MOLDER	2'x2'	1 / 110	
G	STORAGE RACKS	2'x36'		
H	WORK BENCH	4'x8'	1 / 110	
I	WORK BENCH	4'x8'	1 / 110	
J	WORK BENCH	4'x8'	1 / 110	
K	WORK BENCH	4'x8'	1 / 110	
L	WORK BENCH	4'x8'	1 / 110	
M	TABLE ROUTER	34"x.34"	1 / 110	
O	TABLE SAW	87"x125"	1 / 220	
P	DRAWER ASSEM. TABLE	36"x10"	1 / 220	
Q	ROUTER TABLE	34"x34"	1 / 110	
R	EDGE SANDER	2'x6'	1 / 220	
S	JOINTER	30"x72"	1 / 220	
T	PLANER	4'x4'	1 / 220	
U	WIDE BELT SANDER	4'x6'	1 / 220	
V	TABLE SAW	87"x125"	1 / 220	
W	EDGE BANDER	5'x12'	1 / 220	
X	CNC (FUTURE?)	10'x20'		
Y	HOLE MACHINE	3'x6'	1 / 110	
Z	PANEL ROUTER	4'x2'	1 / 110	
AA	BLUME DOOR MACH.	33"x10'	1 / 220	
AB	FACE FRAME RACK	5'x10'		
AC	POCKET SCREW MACH.	3'x3'	1 / 110	
AD	RAZOR GAUGE	30"x23'	2 / 110,220	
AE	LUMBER S4S RACK	3'x36'		
AF	DOOR ASSEM. RACK	4'x8'		
AG	SHAPER	42"x42"	2 / 220	
AH	SHAPER	42"x42"		
AI	SHAPER	42"x42"	2 / 220	
AJ	SHAPER	42"x42"		
AK	HORIZ. SHEET RACK	52"x115"		
AL	VERT. SHEET RACK	52"x12'		
AM	VERT. SHEET RACK	52"x12'		
AN	PANEL SAW	6'x14'	1 / 220	
AO	HORIZ. SHEET RACK	52"x115"		
AP	HORIZ. SHEET RACK	52"x115"		
PA	AIR COMPRESSOR	3'x7'	1 / 220	
PB	DUST COLLECTOR	5'x14'	1 / 220	
PW	POWER PANEL	18"x5'		

RECORD DRAWING
INFORMATION TO CREATE THIS RECORD DRAWING WAS BASED ON INFORMATION OBTAINED FROM THE CONTRACTOR AND/OR ON-SITE OBSERVATIONS.
FEBRUARY 2017

BAR IS ONE INCH ON ORIGINAL DRAWING.
ADJUST SCALE AS SHOWN ACCORDINGLY.

REV.	DESCRIPTION	REVISED BY	DATE

REVISIONS

DIGITAL SIGNATURE
REGISTERED PROFESSIONAL ENGINEER 11529 OREGON JAN 29, 1982 CURTIS J. McLEOD
EXP 12/2016

CURRAN-McLEOD, INC.
CONSULTING ENGINEERS
6655 S.W. HAMPTON ST., SUITE 210
PORTLAND, OREGON 97223
PHONE (503) 684-3478

HOLLEMAN PROPERTIES
CABINET SHOP CONSTRUCTION

FLOOR PLAN

MARION COUNTY, OREGON

DATE	OCT 2015
P/N	GENERAL
D/B	CJM
D/S	PCB
CAD#	

C11 *OF* C11

\Curt\Holleman Properties\Hubbard - MH Cabinetry Shop - As-Built Plans\MH Cabinetry Shop Drawing C1-C10-AS-BUILT.dwg, 4/11/2017 3:50:21 PM, PDF Architect 5.pc3

1 BUILDING 2 VICINITY MAP
SCALE: N.T.S

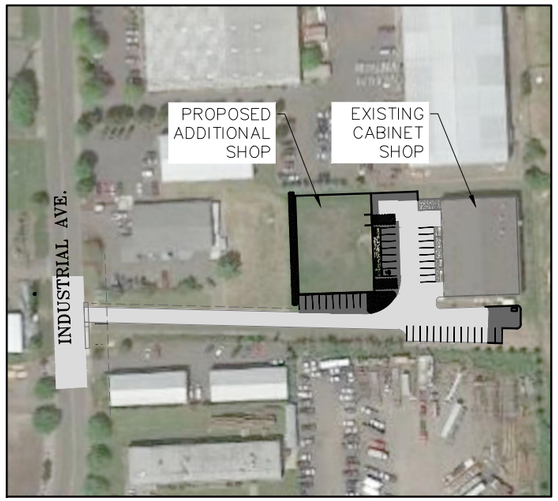

2 BUILDING 2 SITE MAP
SCALE: 1" = 100'

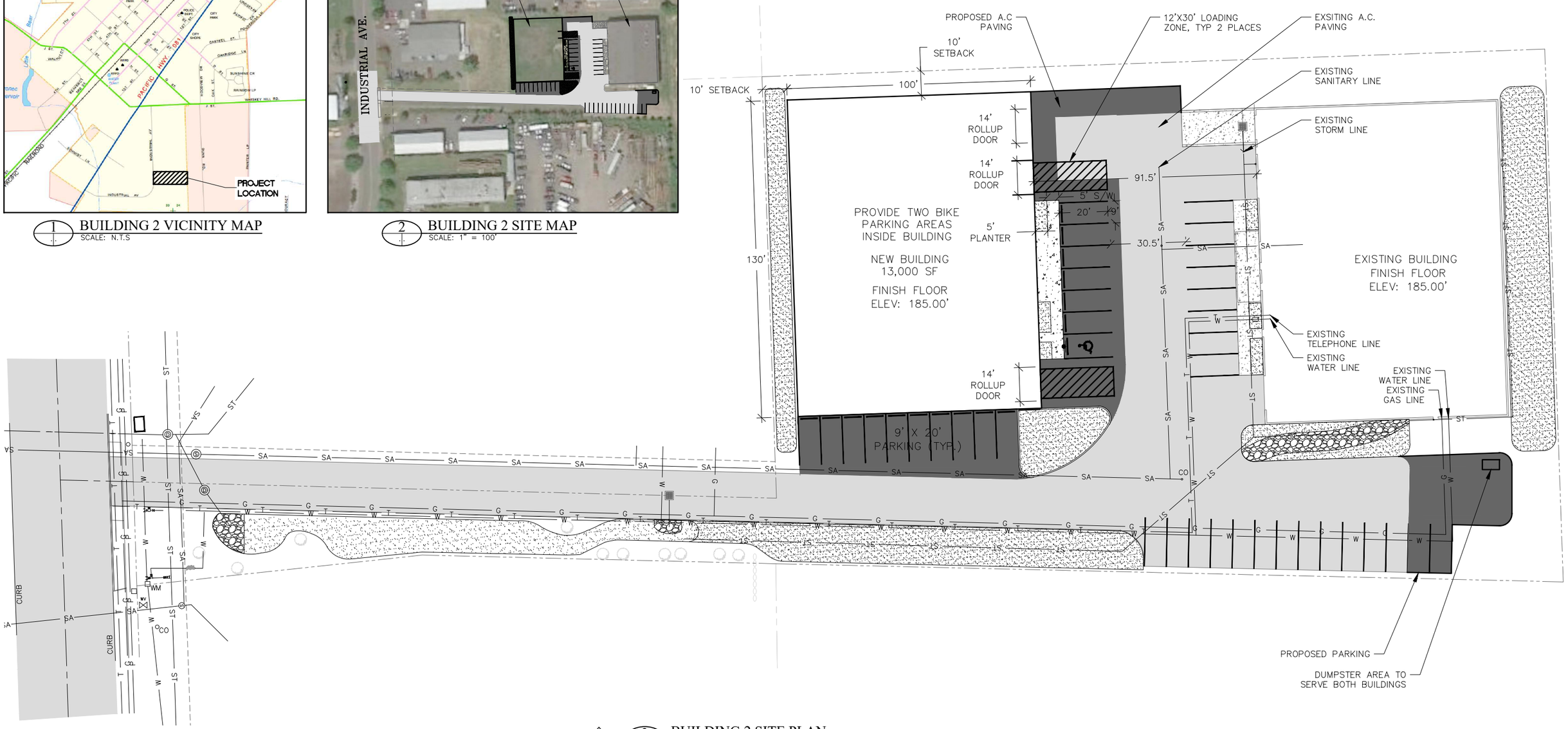

3 BUILDING 2 SITE PLAN
SCALE: 1" = 20'

REVISED: 6-5-20

BAR IS ONE INCH ON ORIGINAL DRAWING.
ADJUST SCALE AS SHOWN ACCORDINGLY.

REV:#			
REV:#			
REV:#			
REV:#			
REV:#			
REV:#			
REV:#			

REVISIONS

DIGITAL SIGNATURE
REGISTERED PROFESSIONAL ENGINEER 11,529 OREGON APRIL 29, 1987 CURTIS JAMES McLEOD
EXPIRES: 12/31/2020

CURRAN–McLEOD, INC.
CONSULTING ENGINEERS
6655 S.W. HAMPTON ST., SUITE 210
PORTLAND, OREGON 97223
PHONE (503) 684–3478

HOLLEMAN PROPERTIES
CABINET SHOP CONSTRUCTION

BUILDING 2 CONCEPT PLAN

MARION COUNTY, OREGON

DATE	APRIL 2020
P/N	Holleman
D/B	CJM
D/S	PCB
CAD#	

1 *OF* 1

J:\Curt\HollemanProperties\MH-CABINETRY SHOP PHASE 2DWG\MH CABINETRY SHOP PHASE 2 SITE PLAN.dwg, 6/5/2020 11:51:19 AM, DWG To PDF.pc3

PLANT LEGEND "VERIFY ALL QUANTITIES"

SYM	#	BOTANICAL	COMMON	SIZE
CML	5	CROCOSMIA M. "LUCIFER"	CROCOSMIA	1 GAL
EGV	16	ERICA CARNEA "VIVELLI"	SPRING HEATHER	2 GAL
JT	12	JUNIPERUS C. "TORULOSA"	HOLLYWOOD JUNIPER	5 GAL - 5 FT
CDL	174	COTONEASTER D. "LOWFAST-S" GC	LOWFAST COTONEASTER	1 GAL
PC	7	PINUS CONTORTA	SHORE PINE	6 FT - 8 FT
PP	1	PINUS PONDEROSA	PONDEROSA PINE	8 FT - 8 FT
JS	44	JUNIPERUS C. "SKYROCKET"	SKYROCKET JUNIPER	5 GAL - 5 FT
NOH	21	NANDINA DOMESTICA "HARBOUR DWARF"	HARBOUR NANDINA	5 GAL

NOTE: THIS PLANTING PLAN IS DESIGNED TO TOLERATE DROUGHT CONDITIONS.
INSTALL ALL PLANTS IN OCT TO NOV//WITH SOIL MOIST PELLETS PER MANUFACTURE RECOMENDATIONS//HAND WATER UNTIL ESTABLISHED.
DO NOT DOWN-SIZE OR SUBSTITUTE PLANTS OR THIS PLAN IS VOID.
THIS IS A XERISCAPE //CONTAINER ONLY PLANTS (NO B&B OR BARE ROOT)

RIVER ROCK/RIP RAP (CONSULT OWNER FOR DETAILS)

EXISTING DECIDUOUS TREE LOCATION (PROTECT UNLESS OTHERWISE NOTED)

EXISTING CONIFEROUS TREE LOCATION (PROTECT UNLESS OTHERWISE NOTED)

EXISTING VEGETATION "TYP." (PROTECT UNLESS OTHERWISE NOTED)

NOT REVIEWED

LANDSCAPE PLAN

ATTENTION: Oregon law requires you to follow rules adopted by the Oregon Utility Notification Center. These rules are set forth in OAR 952-001-0010 through OAR 952-001-0090. You may obtain copies of the rules by calling the center. (Note: the telephone number for the Oregon Utility Notification Center is (503) 232-1987)

20'

0 10 20

SCALE IN FEET

REGISTERED 315 Darrell Mulch OREGON 10-18-93 LANDSCAPE ARCHITECT

NO	REVISION	SCALE BY	DATE

REVISIONS

MULCH

DARRELL MULCH
LANDSCAPE ARCHITECTURE

1907 N.E. 60TH AVENUE #106 · PORTLAND, OREGON 97213 · (503) 222-4436 FAX

HOLLEMAN PROPERTIES
CABINET SHOP CONSTRUCTION

LANDSCAPE PLAN

MARION COUNTY, OREGON

DATE JUL 2018
DR GENERAL
DS DM
CO
DG

L1 OF 1

MH CABINETRY SHOP 25 yr

CITY OF HUBBARD

STORM/DETENTION POND CALCULATIONS

ASSUMPTIONS:

- 25-YR, 24-HR DESIGN STORM (3.80" RAINFALL - ISO PLUVIAL MAP) POST-DEVELOPMENT
- 5-YR, 24-HR PRE-DEVELOPED CONDITIONS (2.80" RAINFALL)
- PRE-DEVELOPED T.C. = 36 MINUTES
- POST-DEVELOPED T.C. = 5 MINUTES

AREA:

	PERMEABLE	IMPERMEABLE
PRE-DEV.	1.73 Ac ~~4~~	Ø
POST-DEV.	0.60 ~~0.90~~ Ac ~~1.20~~	~~0.53~~ ~~0.83~~ Ac 1.13
COEFFICIENT #	86	98

PEAK FLOW PRE-DEVELOPMENT = 0.40 cfs 5-YR

PEAK FLOW POST-DEVELOPMENT = 1.41 cfs 25-YR

MINIMUM DETENTION VOLUME TO LIMIT FLOW TO 0.40 cfs = 2,184 cf

VOLUME OF DETENTION POND AS DESIGNED = ~~3,133 cf~~

UPDATE: 3,240 cf HAI

(SEE SHEET 7)

FOR OUR DETENTION POND, ORIFICE SIZE TO LIMIT FLOW TO 0.40 cfs = 1.375" OR 1 3/8"

(TRIAL/ERROR - PAGE 5)

CORRECTION: 3.25" Ø

(TRIAL/ERROR & CALCULATION - PAGE 6)

HAI

REGISTERED PROFESSIONAL ENGINEER 17219PE OREGON JULY 19, 1994 HASSAN ABBAS IBRAHIM

6.30.2017

Paul Beskow **JJ 08:02 17-Sep-15**

Project 00-002
Sample problems for testing and experimenting

5-YR
PRE-DEV

RUNOFF by the SANTA BARBARA URBAN HYDROGRAPH
MH Cabinetry Shop

2-year, 24-hour rainfall = 2.30"

	flow type	description	coeff.	distance	fall	slope	T/C
1	overland sheet	short.grass,lawns	n=0.15	100.0	0.3'	0.30%	24.7'
2	shallow concentrated	short.grass,lawns	K=11	404.0	1.2'	0.30%	11.2'

total Time of Concentration = 35.9'

storm hyetograph: SCS TypeIA
return period = 5 years
storm duration = 24 hr.
total rainfall = 2.80 in.

pervious area = 1.73 A CN = 86
impervious area = 0.00 A CN = 98
total site area = 1.73 A

hydrograph file: c:\users\paul beskow\documents\hydrographs\mhcab-5yrpre-final.hyd

peak flow = 0.40cfs @ 8.00 hr.
runoff volume = 9,365 cu.ft.

Paul Beskow ***JJ 08:02 17-Sep-15***

Project 00-002
Sample problems for testing and experimenting

10-YR
PRE-DEV

RUNOFF by the SANTA BARBARA URBAN HYDROGRAPH
MH Cabinetry Shop

2-year, 24-hour rainfall = 2.30"

	flow type	*description*	*coeff.*	*distance*	*fall*	*slope*	*T/C*
1	overland sheet	short.grass,lawns	n=0.15	100.0	0.3'	0.30%	24.7'
2	shallow concentrated	short.grass,lawns	K=11	404.0	1.2'	0.30%	11.2'

total Time of Concentration = 35.9'

storm hyetograph: SCS TypeIA
return period = 10 years
storm duration = 24 hr.
total rainfall = 3.30 in.

pervious area = 1.73 A CN = 86
impervious area = 0.00 A CN = 98
total site area = 1.73 A

hydrograph file: c:\users\paul beskow\documents\hydrographs\mhcab-10yrpre-final.hyd

peak flow = 0.54cfs @ 8.00 hr.
runoff volume = 12,063 cu.ft.

Paul Beskow ***JJ 08:04 17-Sep-15***

Project 00-002
Sample problems for testing and experimenting

RUNOFF by the SANTA BARBARA URBAN HYDROGRAPH
MH Cabinetry Shop

25-YR
POST-DEV

total Time of Concentration = 5.0'

storm hyetograph: SCS TypeIA
return period = 25 years
storm duration = 24 hr.
total rainfall = 3.80 in.

pervious area = 0.90 A CN = 86
impervious area = 0.83 A CN = 98
total site area = 1.73 A

hydrograph file: c:\users\paul beskow\documents\hydrographs\mhcab-25yrpost-final.hyd

peak flow = 1.41cfs @ 7.83 hr.
runoff volume = 18,472 cu.ft.

3.8*
Q = [illegible]

Paul Beskow **JJ 08:12 17-Sep-15**

Project 00-002
Sample problems for testing and experimenting

HYDROGRAPH
MH Cabinetry Detention Facility Hydrograph Test

load C:\Users\Paul Beskow\Documents\Hydrographs\mhcab-25yrpost-final - Copy (2).hyd
detention for 0.40 cfs 5-YR PRE-DEV

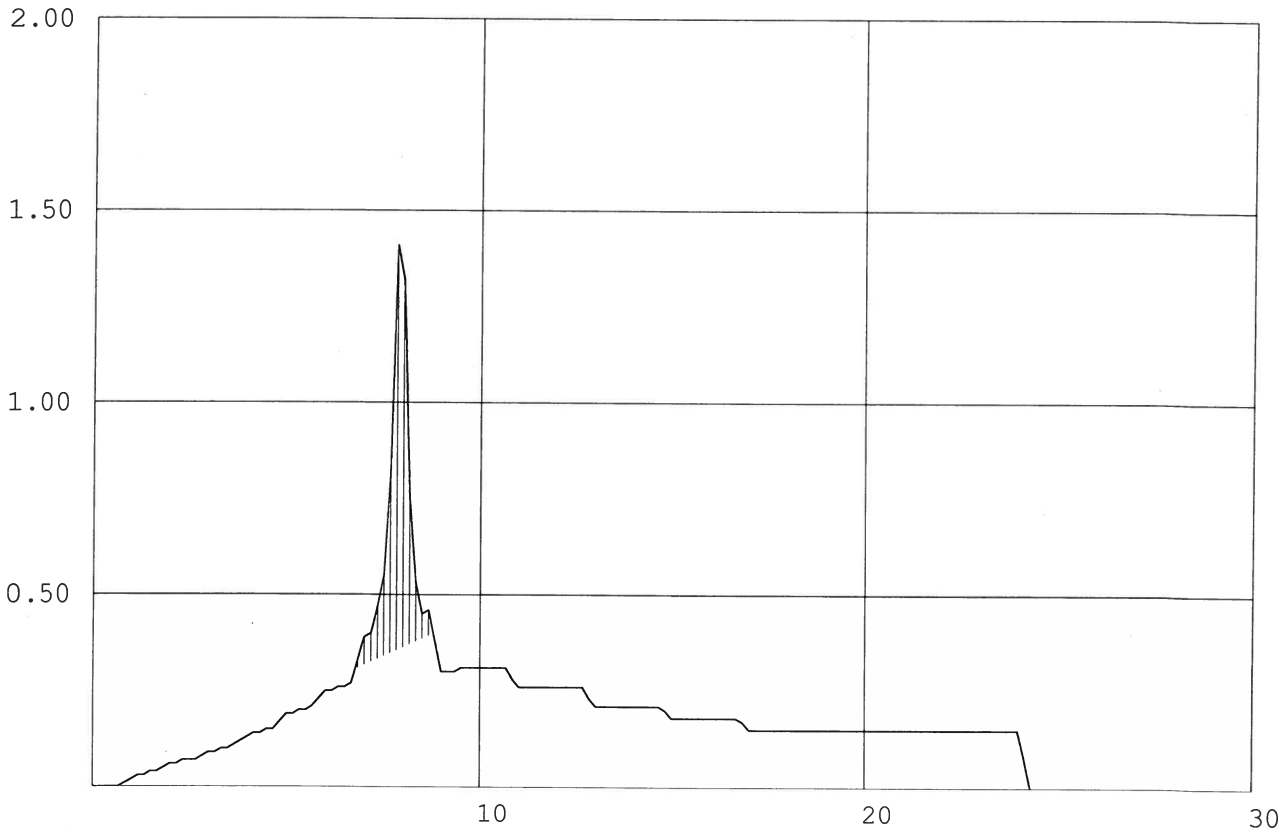

peak flow = 1.41 cfs @ 7.83 hours
volume = 18,492 cu.ft.
detention volume = 2,184 c.f. to limit flow to 0.40 cfs
REQUIRED

<3140

OUR DETENTION FACILITY EXCEEDS REQUIREMENT BY 949 cf

Paul Beskow *JJ 08:12 17-Sep-15*

Project 00-002
Sample problems for testing and experimenting

DETENTION ROUTING
MH Cabinetry Shop Detention Facility

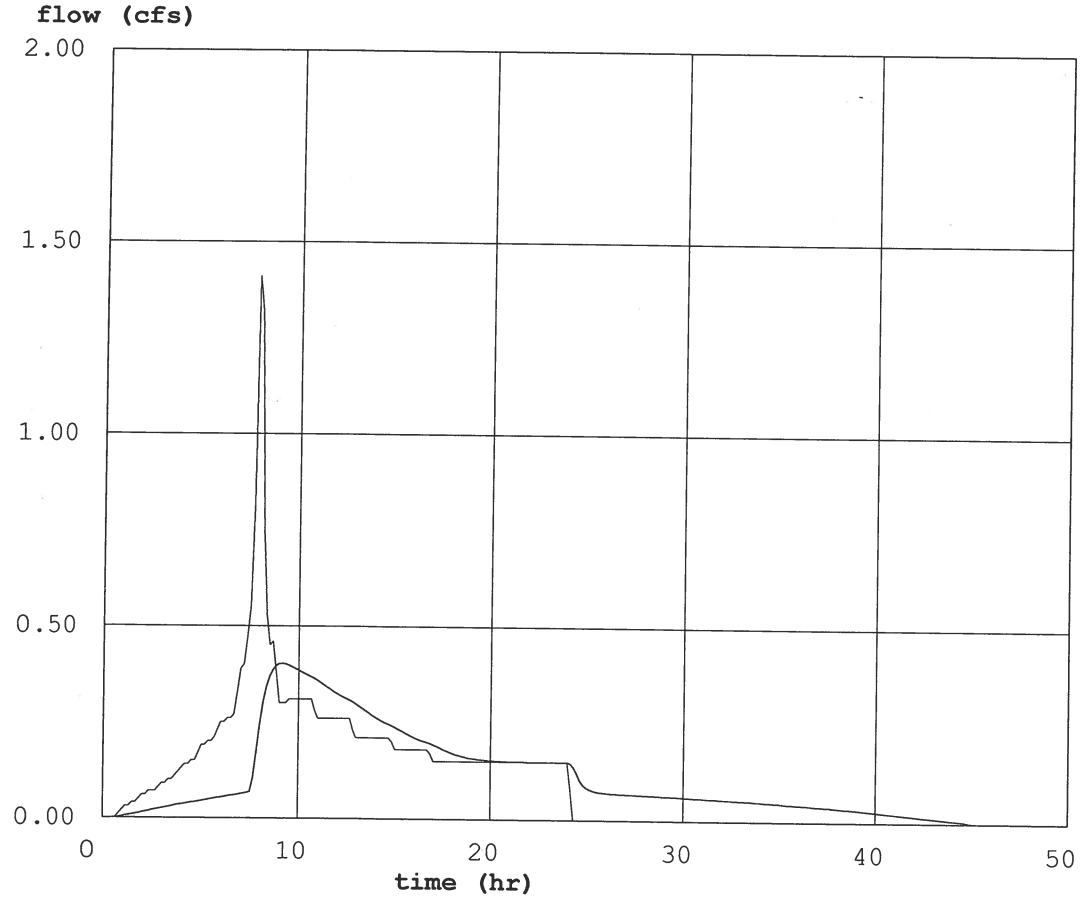

DETENTION POND (stage-volume calculated)

elevation	area	volume
100.00	760	0
100.50	1160	476
101.00	1565	1155
101.50	1980	2039
102.00	2400	3133

STAGE	*VOLUME*
100.0	0
100.5	476
101.0	1155
101.5	2039
102.0	3133

OUTLET TYPE	*ELEVATION*	*SIZE*
circ. orifice	100.0	dia.(in) = 1.38 1 3/8"

inflow hydrograph: c:\users\paul beskow\documents\hydrographs\mhcab-25yrpost-final - copy.hyd

peaks: inflow = 1.41 cfs @ 7.83 hr. 25-YR POST-DEV
outflow = 0.40 cfs @ 9.33 hr. 5-YR PRE-DEV
stage: 64.93 ft. detained volume: 5,066 c.f.

Paul Beskow *JJ 15:26 30-Sep-15*

Project 00-002
Sample problems for testing and experimenting

DETENTION ROUTING
MH Cabinetry Shop Detention Facility

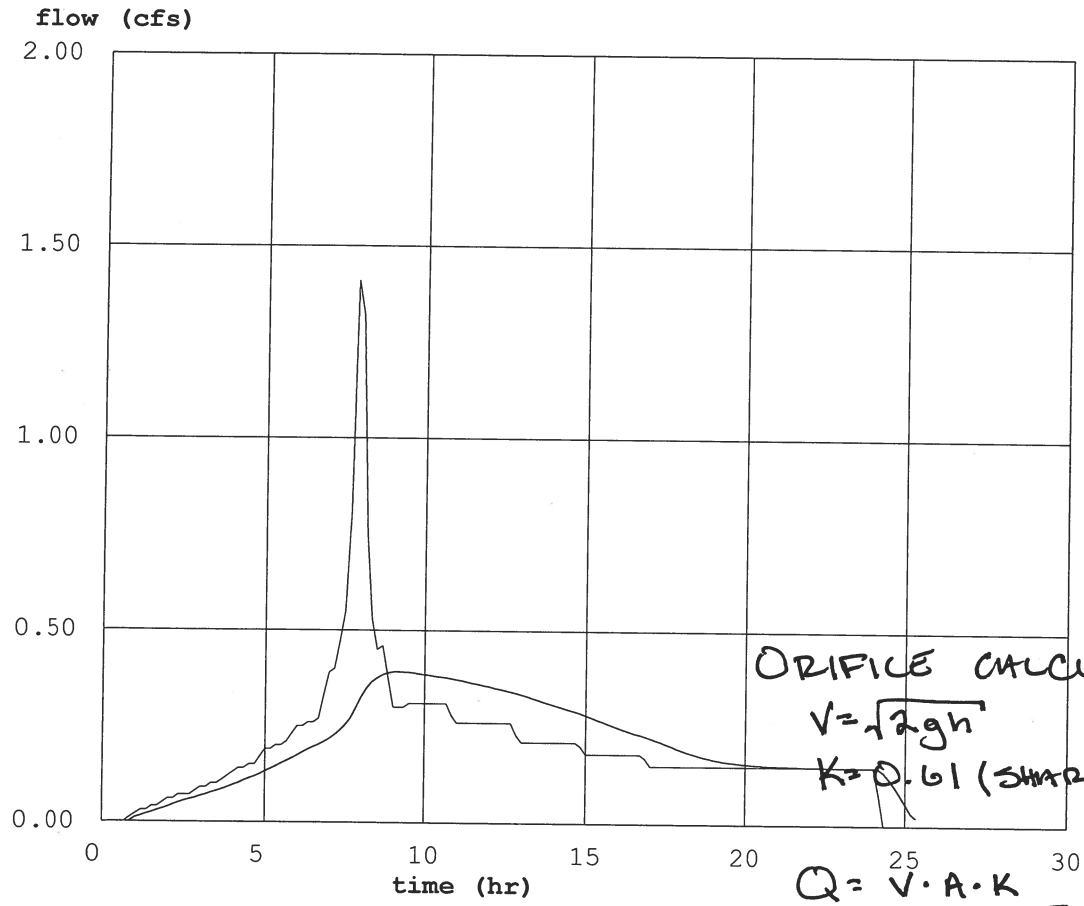

ORIFICE CALCULATION:

$V = \sqrt{2gh}$

$K = 0.61$ (SHARP-EDGED ORIFICE)

$Q = V \cdot A \cdot K$

$Q = \sqrt{2gH}\ \frac{\pi}{4} d^2 K$

$0.40 \frac{ft^3}{sec} = \sqrt{2(32.2 \frac{ft}{sec^2})(2ft)}\ \frac{\pi}{4} d^2 (0.61)$

$0.40 \frac{ft^3}{s} = (\sqrt{128.8 \frac{ft^2}{s^2}})(0.785)(0.61) d^2$

$d^2 = \frac{0.40 ft^3/s}{5.43 ft/s} = 0.0736 ft^2$

$d = 0.271 ft = 3.25$ inches

DETENTION POND (stage-volume calculated)

elevation	area	volume
100.00	760	0
100.50	1160	476
101.00	1565	1155
101.50	1980	2039
102.00	2400	3133

STAGE	*VOLUME*
100.0	0
100.5	476
101.0	1155
101.5	2039
102.0	3133

OUTLET TYPE	*ELEVATION*	*SIZE*
circ. orifice	100.0	dia.(in) = 3.25

inflow hydrograph: c:\users\paul beskow\documents\hydrographs\mhcab-25yrpost-final - copy (2).hyd

peaks: inflow = 1.41 cfs @ 7.83 hr.
outflow = 0.39 cfs @ 9.33 hr.
stage: 1.92 ft. detained volume: 2,966 c.f.

Paul Beskow *JJ 17:06 13-Oct-15*

Project 00-002
Sample problems for testing and experimenting

DETENTION ROUTING
MH Cabinetry Shop Detention Facility

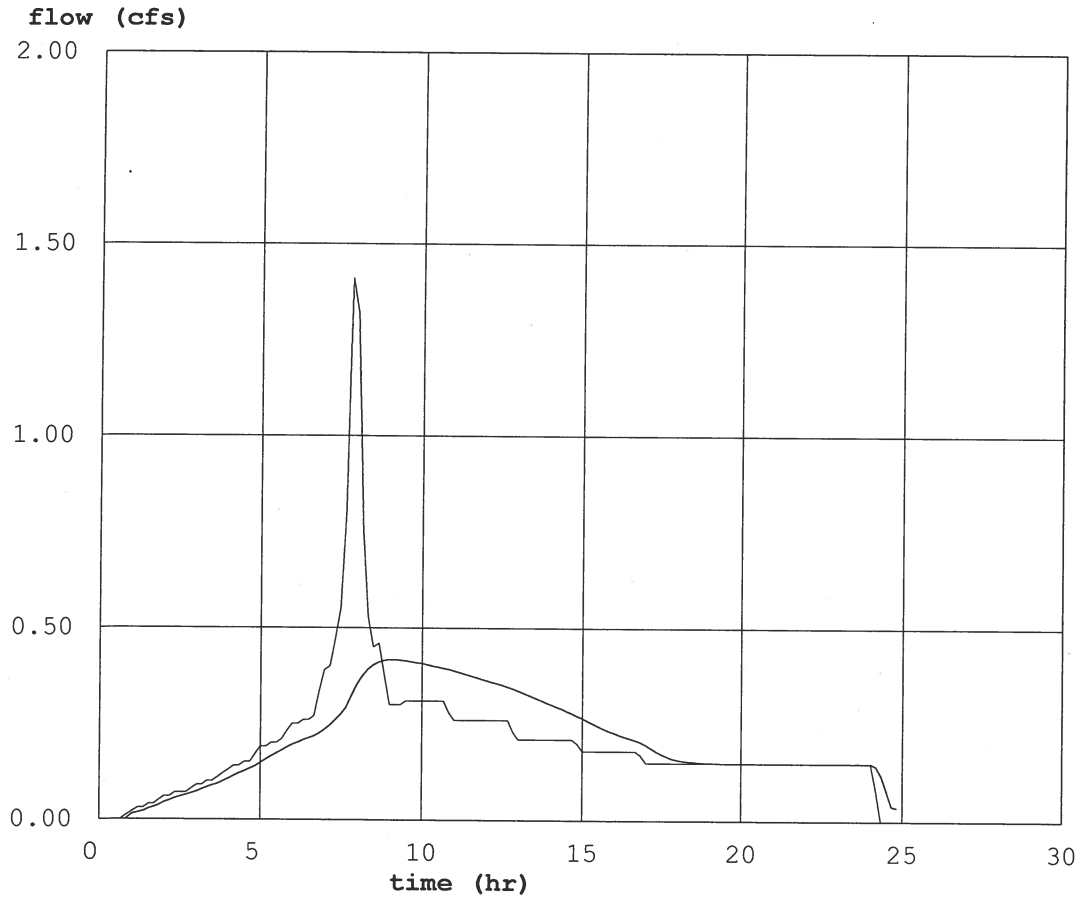

DETENTION POND (stage-volume calculated)

elevation	area	volume
180.50	95	0
181.00	750	185
181.50	1125	651
182.00	1520	1310
182.50	1930	2170
183.00	2340	3236
183.01	2340	3259

STAGE	*VOLUME*
180.5	0
181.0	185
181.5	651
182.0	1310
182.5	2170
183.0	3236
183.0	3259

OUTLET TYPE	*ELEVATION*	*SIZE*
circ. orifice	180.5	dia.(in) = 3.25

inflow hydrograph: c:\users\paul beskow\documents\hydrographs\mhcab-25yrpost-final - copy.hyd

peaks: inflow = 1.41 cfs @ 7.83 hr.
outflow = 0.42 cfs @ 9.17 hr.
stage: 2.19 ft. detained volume: 2,581 c.f.